SUPERIOR®

FORGING COMPONENTS

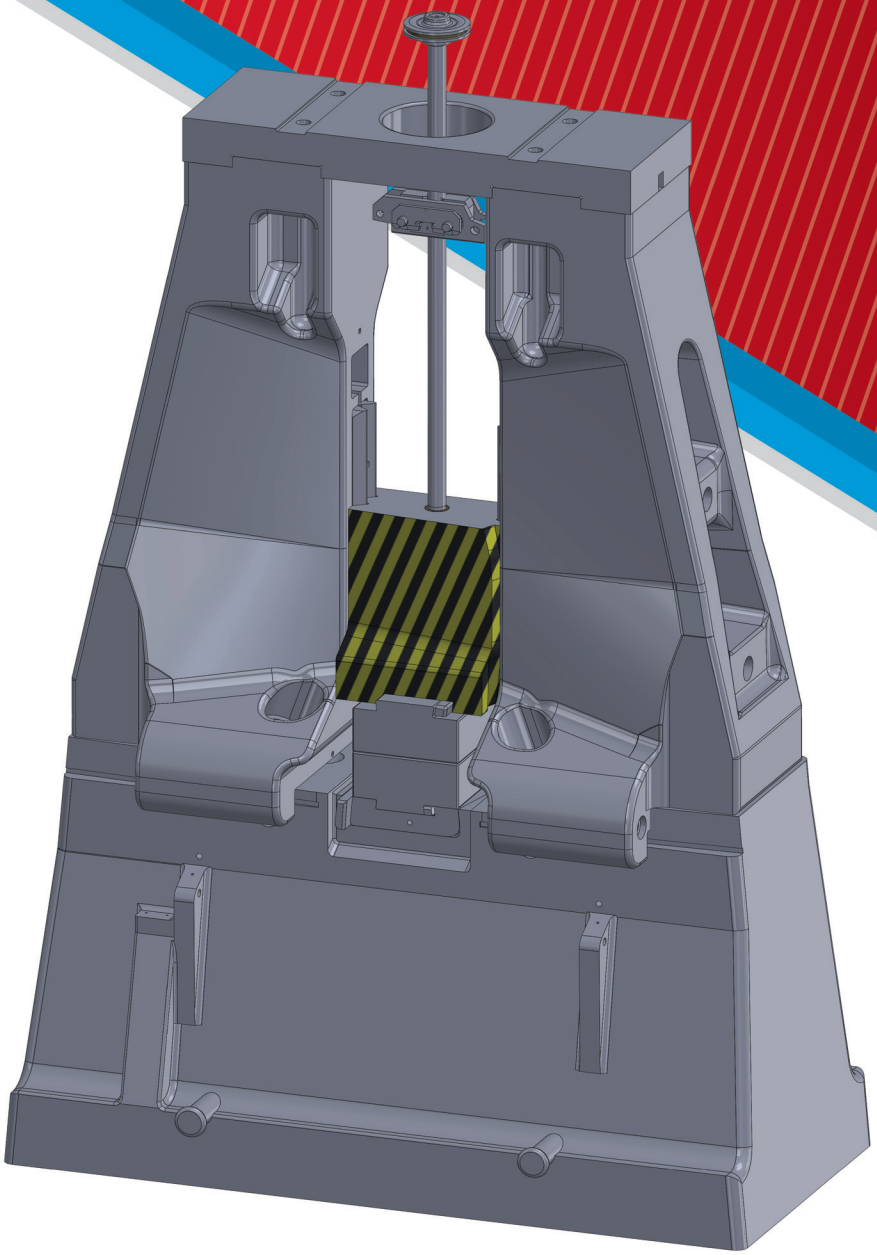

Click here for **3D CAD Link**

website

Quick link to
Main Website

catalog

Quick link to
Master Catalog

3D model

Quick link to
3D CAD Link

video

Quick link to
Videos

Note: When viewing the electronic version, simply click on the image in the right hand corner, and the link will automatically take you to 3D CAD Link.

To use 3D CAD Link:

Click on the
Configure & Download Button

(Login required) Configure & Download

Login to your account

Welcome **Guest** [Login | Register]

Finish your product configuration

uncontrolled if printed or downloaded

TABLE OF CONTENTS

FORGING COMPONENTS

HAMMER ASSEMBLY 7010

CLAMP BUSHINGS 7020

CLAMP ASSEMBLY 7030

RAM BUSHINGS 7040

PISTON RODS 7050

PISTON HEADS 7060

PISTON RINGS 7070

ROCKER ARM BUSHINGS 7080

DOG TIPS 7090

SHOCK ABSORBERS 7090

ROD PACKING 7100

HAMMER KEYS 7110

CUSTOM HAMMER COMPONENTS 7120

HAMMER ASSEMBLY

ITEM NO.	PART NAME	PAGE NO.
1	Piston Head	7060
2	Piston Ring	7070
3	Piston Rod	7050
4	Clamp Assembly	7030
5	Right Hand Hammer Frame	—
6	Left Hand Hammer Frame	—
7	Guide	—
8	Ram Bushing	7040
9	Ram	—
10	Hammer Key	7110
11	Sow Block Key	—
12	Sow Block/Anvil Cap	—
13	Anvil/Hammer Base	—
14	Tie Plate	—

ITEM NO.	PART NAME	CECO PART NO.
1	Piston Head	6001
2	Piston Ring	41
3	Piston Rod	6
4	Clamp Assembly	(See Pg. 7030)
8	Ram Bushing	5003
10	Hammer Key	(See Pg. 7110)
11	Sow Block Key	37

NOTE: ALL PARTS shown in this catalog are for CECO Hammers unless noted.

Superior can manufacture components to order for all hammer makes.

Please contact us for more information.

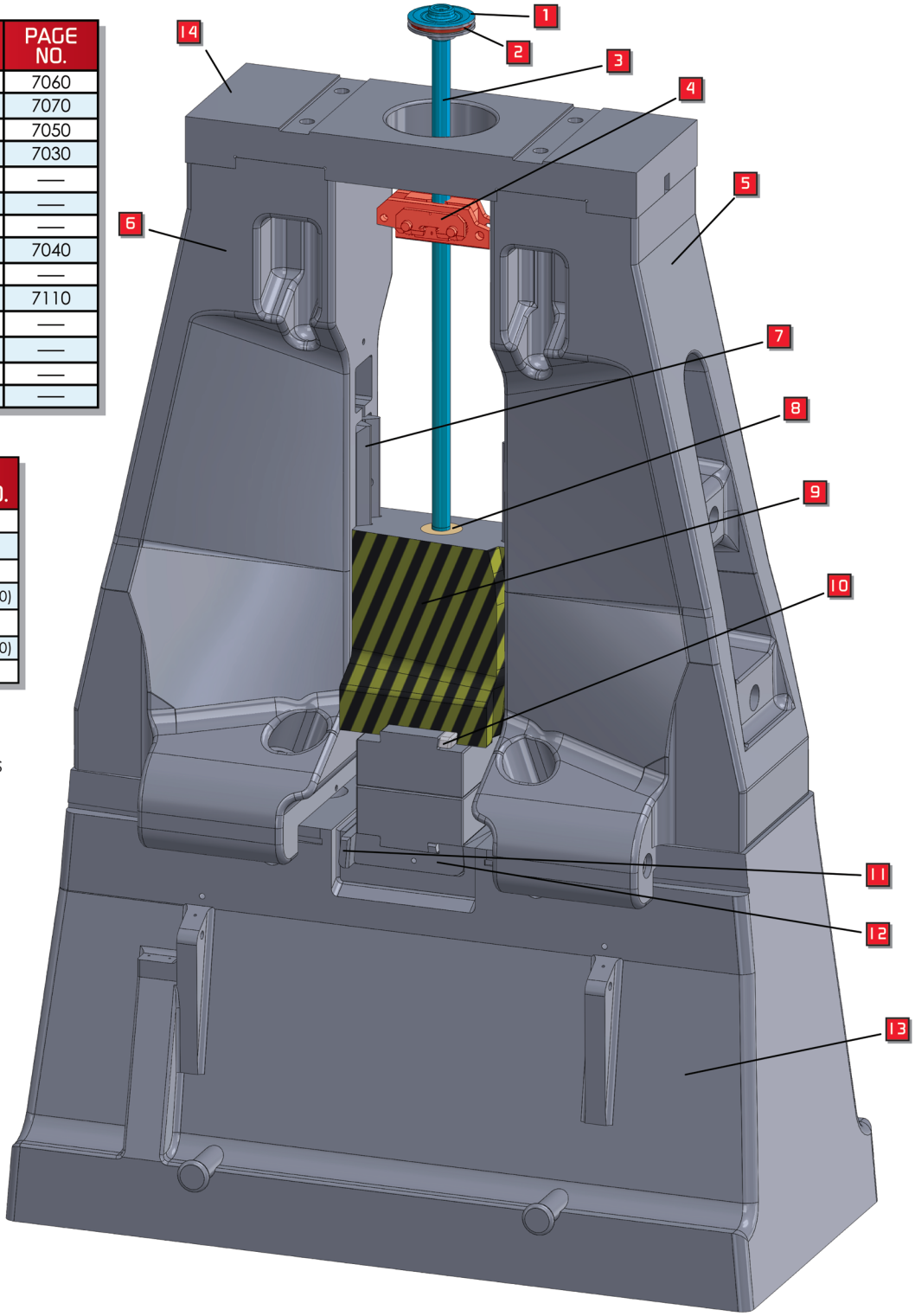

CLAMP BUSHINGS / CLAMP SHOES

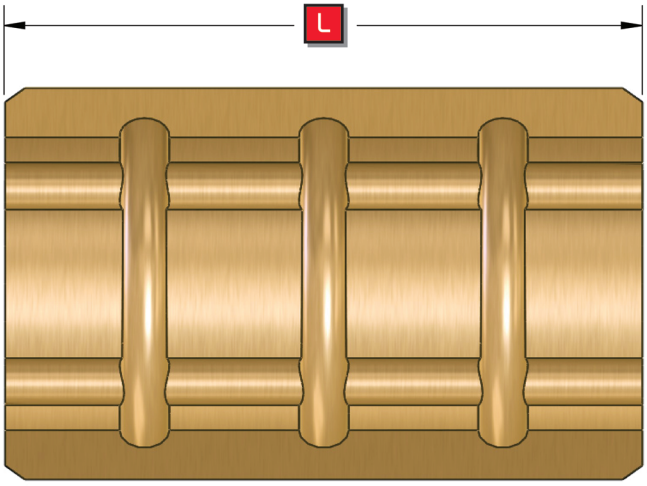

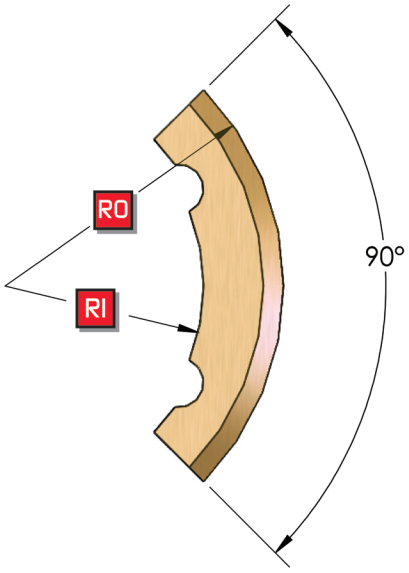

WHEN ORDERING PLEASE SPECIFY:

1. Part Number
2. Quantity (Sold as a set LH/RH)
3. Custom Brake Shoes Available

954 Aluminum Bronze

CLAMP BUSHINGS / CLAMP SHOES

HAMMER SIZE	L	R_0	R_I	PART NO.
1,000#	3.500	1.375	1.000	8150-10CD
1,500#	4.000	1.625	1.125	8150-15CD
2,000#	4.000	1.750	1.250	8150-20CD
2,500#	5.000	1.875	1.375	8150-25CD
3,000#	5.000	2.000	1.500	8150-30CD
4,000#	5.500	2.250	1.750	8150-40CD
5,000#	6.500	2.625	2.000	8150-50CD
6,000#	7.500	2.937	2.250	8150-60CD

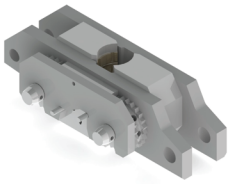

CLAMP ASSEMBLY

ITEM NO.	PART NAME	QTY.
1	Cover Plate	1
2	Clamp Holder Gear	2
3	Handle	2
4	Locking Block	1
5	Spring	1
6	Locking Plunger	2
7	S.H.S.S. Cone Point	2
8	Clamp Bar (Front)	1
9	Clamp Shoes (RH and LH)	2
10	Clamp Holder	2
11	Clamp Bar (Back)	1
12	Adjusting Pins (RH and LH)	2

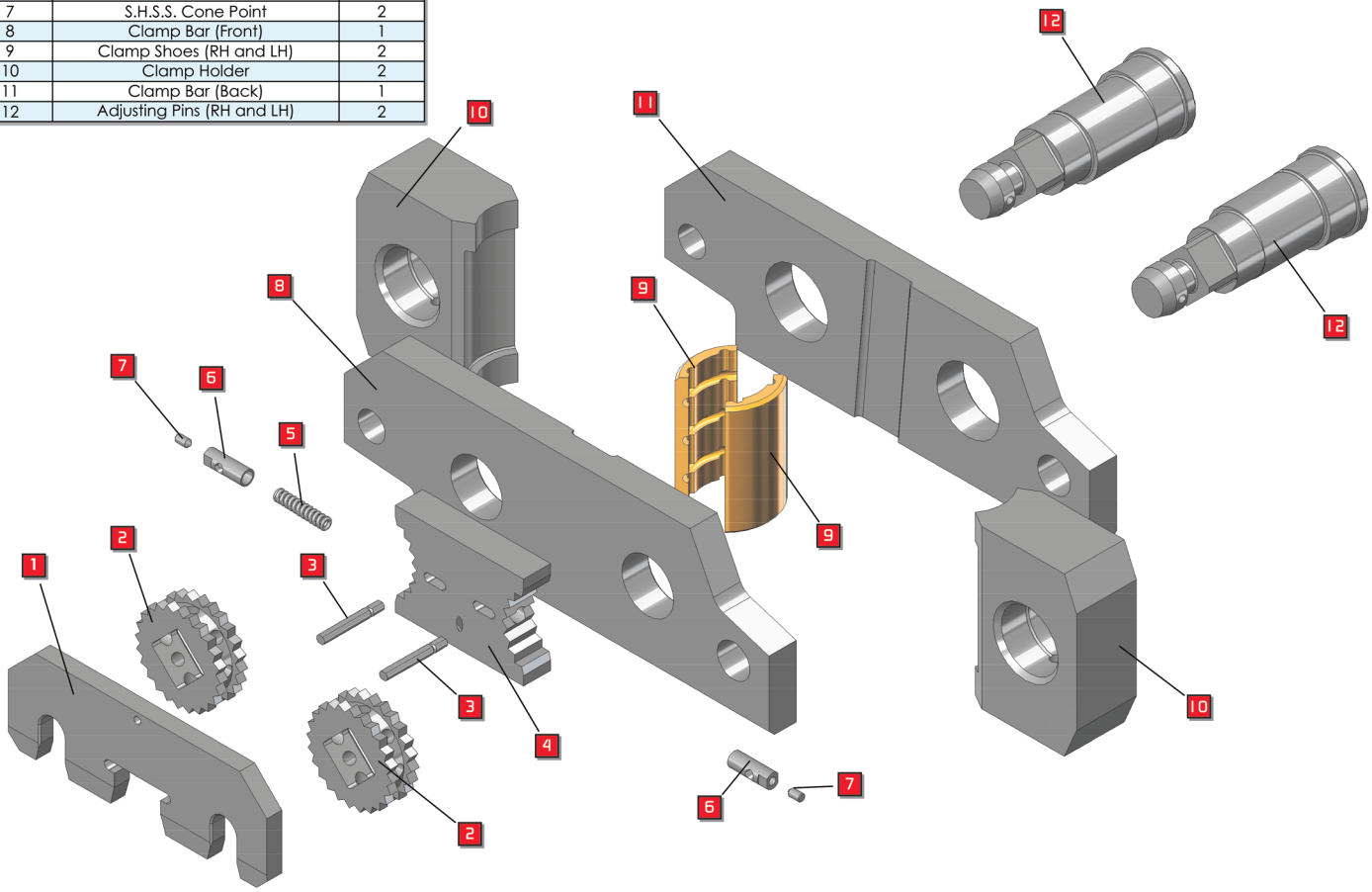

CLAMP ASSEMBLY

HAMMER SIZE	PART NO.
1,000#	8710-CD
1,500#	8715-CD
2,000#	8720-CD
2,500#	8725-CD
3,000#	8730-CD
4,000#	8740-CD
5,000#	8750-CD
6,000#	8760-CD

WHEN ORDERING PLEASE SPECIFY:

1. Part Number
2. Quantity

NOTE: 1) Individual components of clamp assembly also available upon request. Fits **ONLY** Superior made clamp assemblies.

2) This product is **MADE TO ORDER.** Please contact us for more information.

RAM BUSHINGS

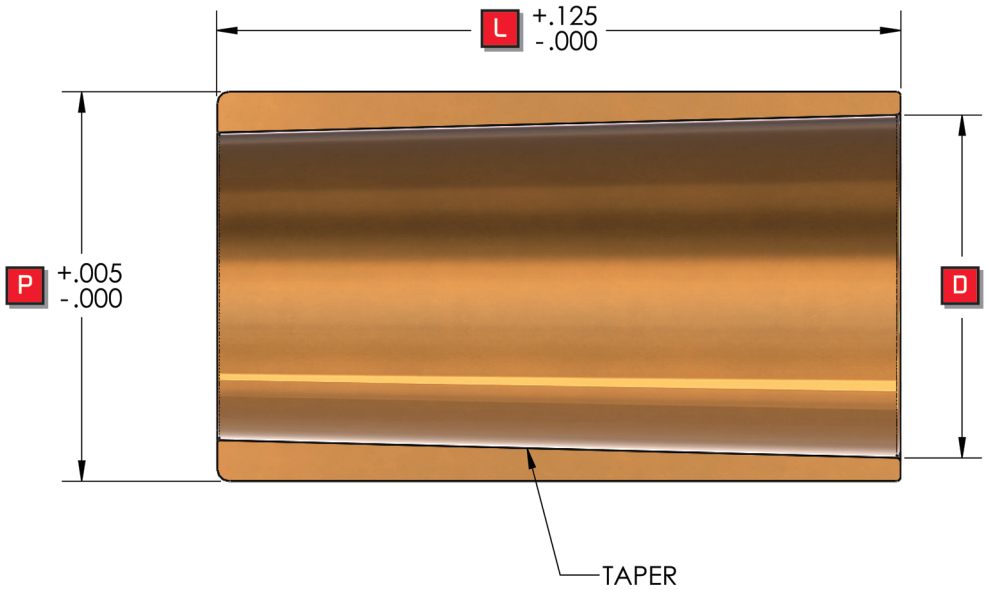

WHEN ORDERING PLEASE SPECIFY:

1. Part Number
2. Quantity

954 Aluminum Bronze

NOTE: Special Sizes Available Upon Request

RAM BUSHINGS

HAMMER SIZE	L	P	D	PART NO.
1,000#	7.750	3.000	1.980	8670-10CD
1,500#	9.250	3.250	2.227	8670-15CD
2,000#	9.250	3.500	2.484	8670-20CD
2,500#	10.250	3.750	2.719	8670-25CD
3,000#	12.250	4.500	2.981	8670-30CD
4,000#	12.250	4.500	3.484	8670-40CD
5,000#	13.750	5.000	3.981	8670-50CD
6,000#	15.250	5.500	4.481	8670-60CD
#8	13.750	6.000	4.941	8670-08DF
#14	15.250	7.000	5.944	8670-14DF
#23	18.250	8.250	6.948	8670-23DF

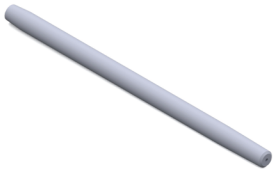

PISTON RODS

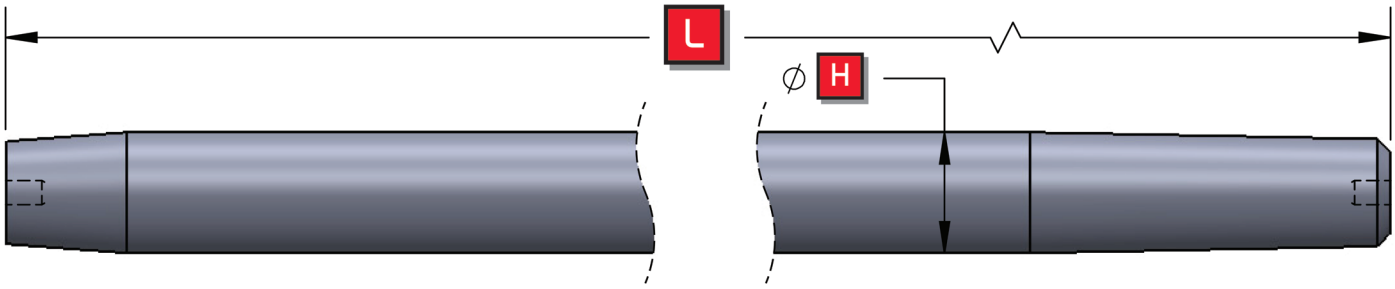

WHEN ORDERING PLEASE SPECIFY:

1. Part Number
2. Quantity

Superior Forge-Rite™ 28-32 Rc

NOTE: 1) Special Sizes Available Upon Request
2) Piston Rod to Head Assemblies Available from Superior.

PISTON RODS

HAMMER SIZE	L	H	PART NO.
1,000#	80.250	2.00	8810-C
1,500#	86.500	2.25	8815-C
2,000#	91.500	2.50	8820-C
2,500#	96.625	2.75	8825-C
3,000#	101.500	3.00	8830-C
4,000#	106.000	3.50	8840-C
5,000#	112.187	4.00	8850-C
6,000#	123.375	4.50	8860-C
#8	66.875	5.00	8808
#14	78.500	6.00	8814
#23	90.313	7.00	8823

PISTON HEADS

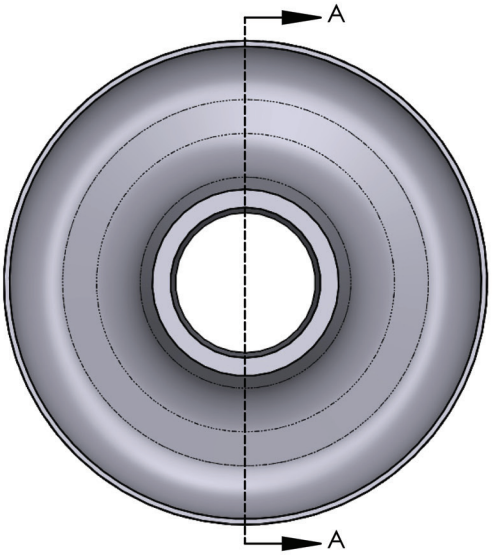

SECTION A-A

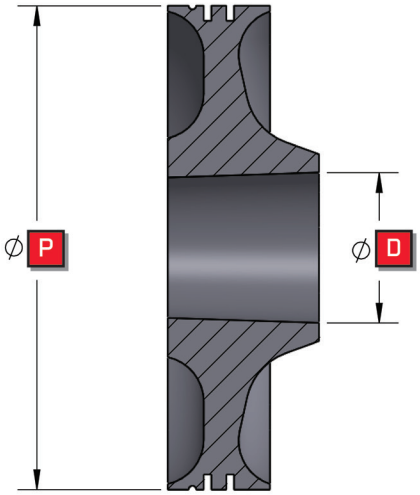

WHEN ORDERING PLEASE SPECIFY:

1. Part Number
2. Quantity

Superior Forge-Rite™ 28-32 Rc

NOTE: 1) Special Sizes Available Upon Request

2) This Product is **MADE TO ORDER.**
Please contact us for more information.

3) Piston Rod to Head Assemblies Available from Superior.

PISTON HEADS

HAMMER SIZE	P	D	PART NO.
1,000#	6.485	1.990	8803-10CD
1,500#	7.731	2.238	8803-15CD
2,000#	8.979	2.476	8803-20CD
2,500#	9.977	2.724	8803-25CD
3,000#	10.975	2.972	8803-30CD
4,000#	12.472	3.470	8803-40CD
5,000#	13.969	3.966	8803-50CD
6,000#	14.967	4.463	8803-60CD
#8	15.979	4.963	8803-08DF
#14	20.462	5.965	8803-14DF
#23	24.968	6.960	8803-23DF

PISTON RINGS (FIBER / STEEL)

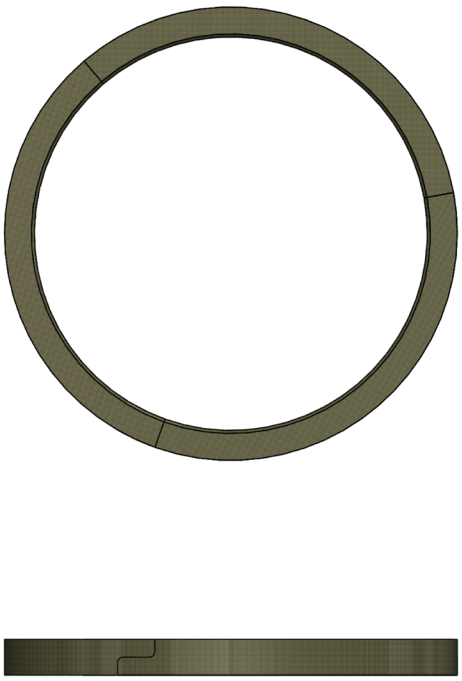

Figure A

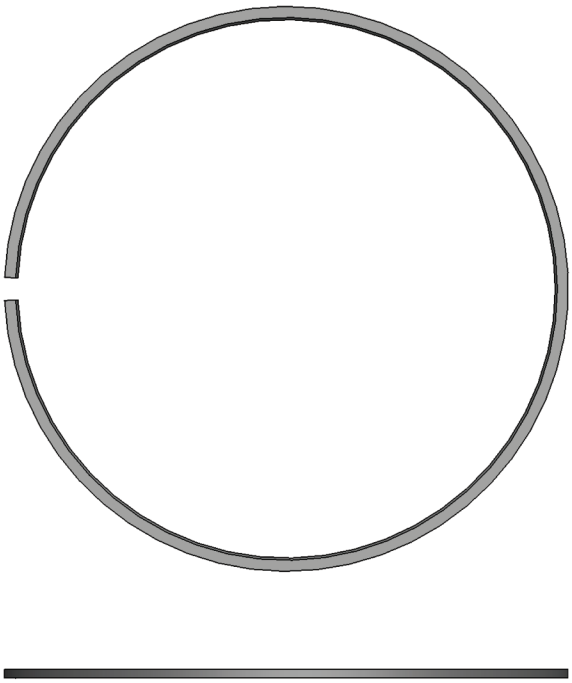

Figure B

PISTON RINGS (FIBER & STEEL)

HAMMER SIZE	PART NO.	DESCRIPTION
1,000#	8802-10CD	for "**CD**", 3-piece step-cut fiber with flat-band expander (1) required per piston head **See Figure A**
1,500#	8802-15CD	
2,000#	8802-20CD	
2,500#	8802-25CD	
3,000#	8802-30CD	
4,000#	8802-40CD	
5,000#	8802-50CD	
6,000#	8802-60CD	
#8	8802-08DF	for "**DF**", steel, lap-cut (2) required per piston head **See Figure B**
#14	8802-14DF	
#23	8802-23DF	

WHEN ORDERING PLEASE SPECIFY:

1. Part Number
2. Quantity

NOTE: Custom Diameters Also Available **MADE TO ORDER**

ROCKER ARM BUSHINGS

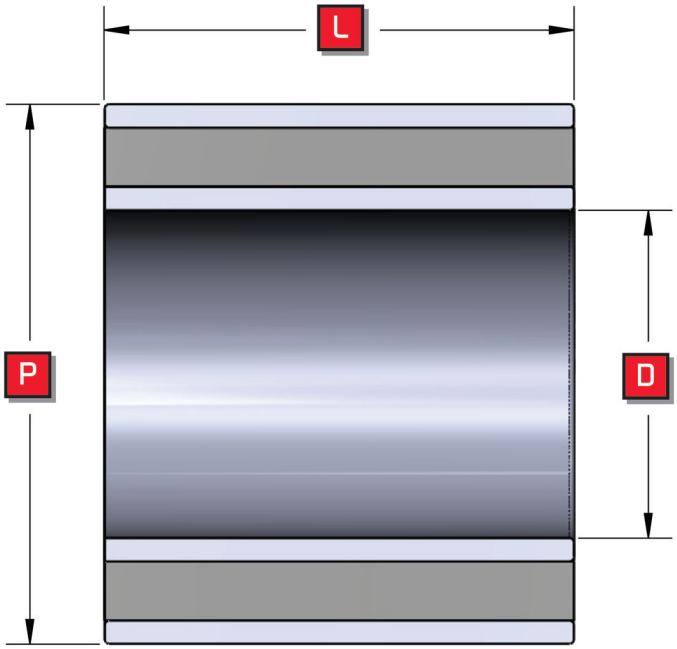

WHEN ORDERING PLEASE SPECIFY:
1. Part Number
2. Quantity

NOTE: 1) In Stock While Supplies Lasts
2) MADE TO ORDER Available

ROCKER ARM BUSHINGS

HAMMER SIZE	P	L	D	PART NO.
1,000#	2.50	2.25	1.50	8502BU
1,500#	2.50	2.25	1.50	8502BU
2,000#	2.50	2.25	1.50	8502BU
2,500#	2.50	2.25	1.50	8502BU
3,000#	3.00	3.00	1.75	8503BU
4,000#	3.00	3.00	1.75	8503BU
5,000#	3.00	3.00	1.75	8503BU
6,000#	3.00	3.00	1.75	8503BU

DOG TIPS

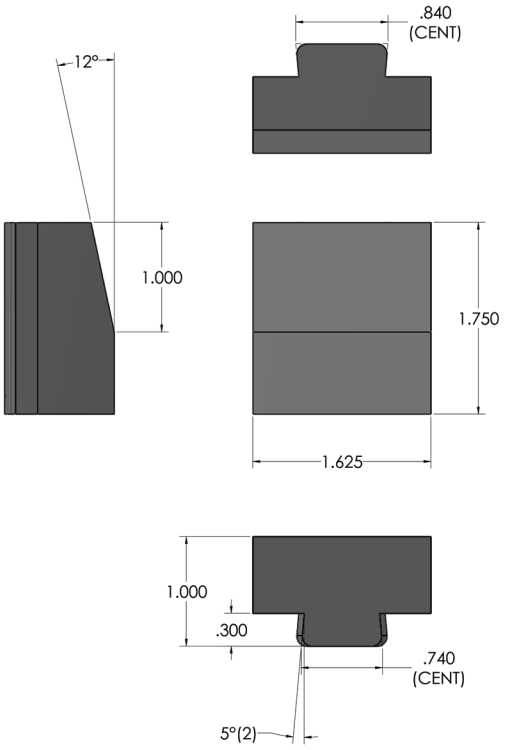

DOG TIPS	
HAMMER SIZE	PART NO.
1,000#	F-2903-DT
1,500#	F-2903-DT
2,000#	F-2903-DT
2,500#	F-2903-DT
3,000#	F-2903-DT
4,000#	F-2903-DT
5,000#	F-2903-DT
6,000#	F-2903-DT

WHEN ORDERING PLEASE SPECIFY:

1. Part Number
2. Quantity

Nylatron Wear-Resistant Polymer

SHOCK ABSORBERS

SHOCK ABSORBERS	
HAMMER SIZE	PART NO.
1,000#	8600SH
1,500#	8600SH
2,000#	8600SH
2,500#	8600SH
3,000#	8600SH
4,000#	8600SH
5,000#	8600SH
6,000#	8600SH

WHEN ORDERING PLEASE SPECIFY:

1. Part Number
2. Quantity

ROD PACKING

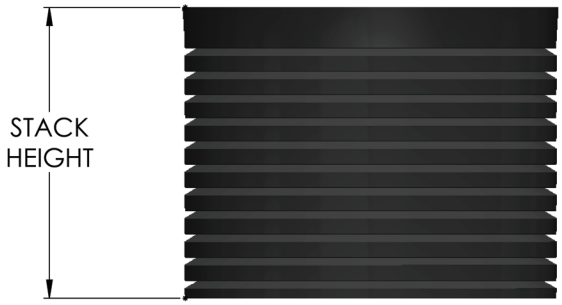

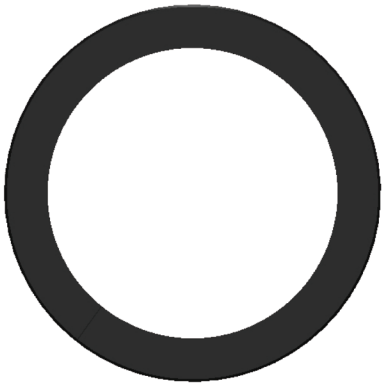

WHEN ORDERING PLEASE SPECIFY:

1. Hammer Size/Type
2. Quantity

NOTE: This Product is **MADE TO ORDER.**
Please contact us
for more information.

ROD PACKING

HAMMER SIZE	ID	OD	H	ARR.
1,000#	2.00	3.00	3.00	0-11-1
1,500#	2.25	3.25	3.00	0-11-1
2,000#	2.50	3.50	3.00	0-11-1
2,500#	2.75	3.75	3.00	0-11-1
3,000#	3.00	4.00	3.00	0-11-1
4,000#	3.50	4.50	3.00	0-11-1
5,000#	4.00	5.00	3.00	0-11-1
6,000#	4.50	5.50	3.00	0-11-1
#8	5.00	7.00	5.00	1-9-1
#14	6.00	8.00	5.00	1-9-1
#23	7.00	9.00	5.00	1-9-1

HAMMER KEYS

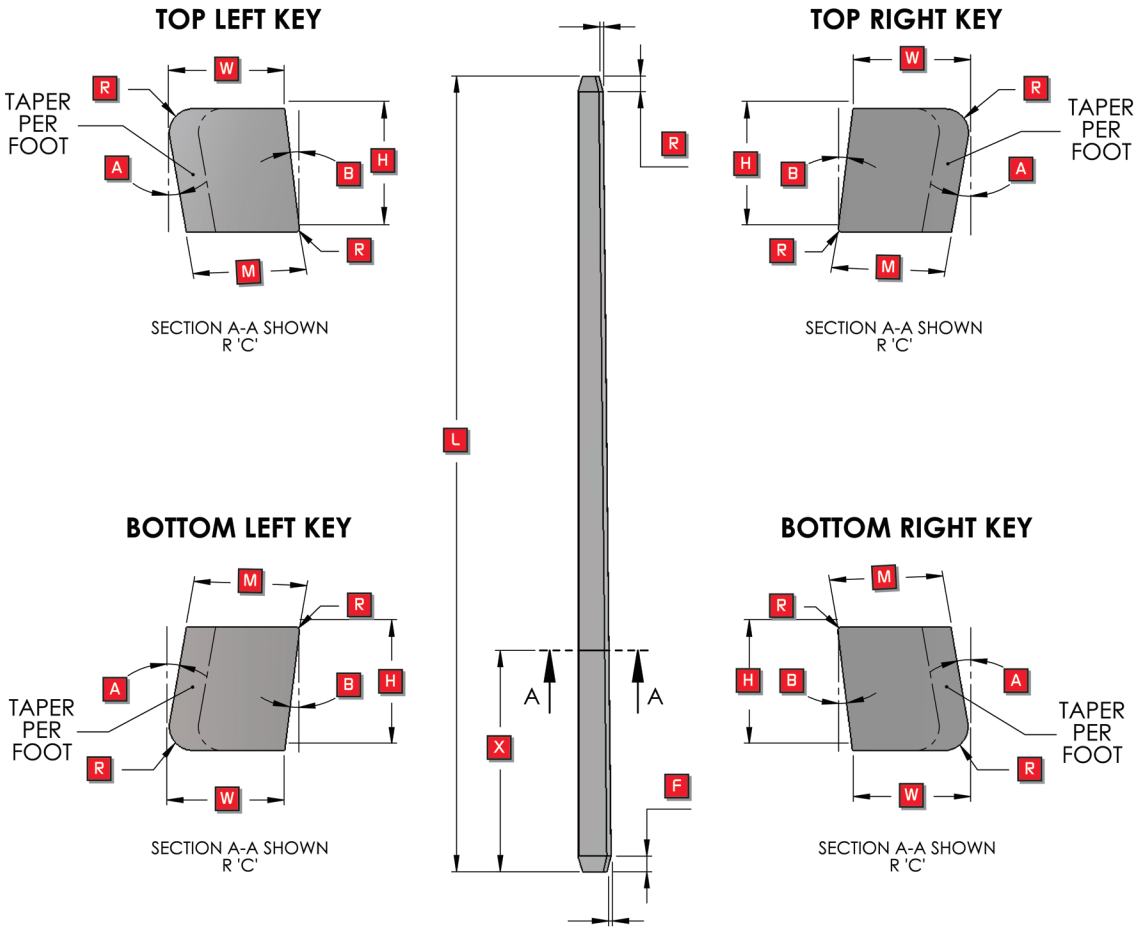

WHEN ORDERING PLEASE SPECIFY:

1. Key Type
2. Specify Material Type & Hardness
3. All Dimensions Per Chart Below

NOTE: This Product is **MADE TO ORDER.**
Please contact us for more information.

HAMMER KEYS

Key Type	Dimensions				A-A Location	Taper Per Foot	Angle		Clearance	
	H	W	M	L			A	B	F	R
Top L										
Top R										
Bot L										
Bot R										

CUSTOM HAMMER COMPONENTS

Custom forging components are available from Superior Die Set as either variations of standard components or as unique items made to order. Utilize Superior's extensive manufacturing capabilities and decades of forging industry expereience to help meet your maintenance needs.

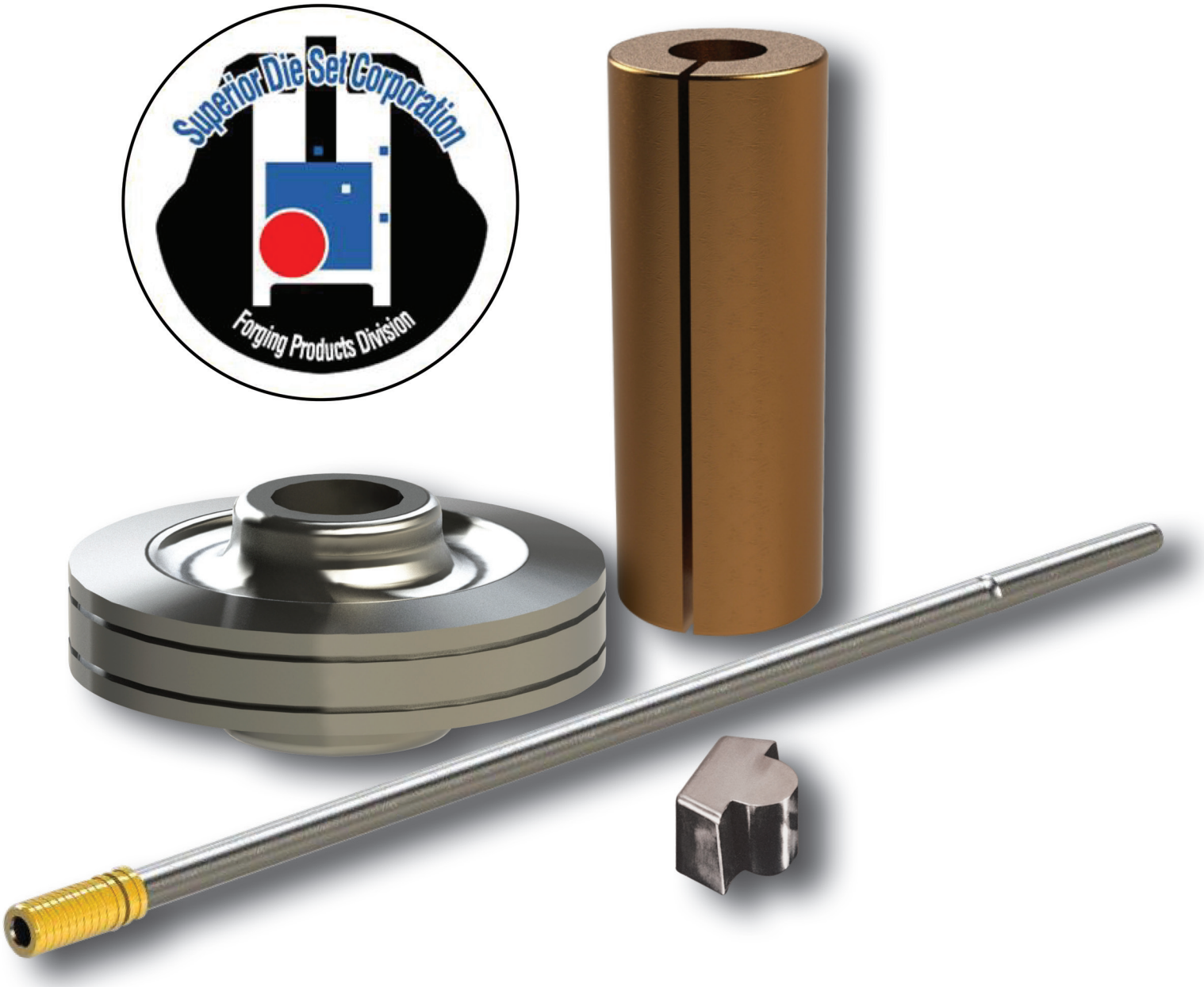

900 West Drexel Avenue
Oak Creek, WI 53154

(800) 558-6040
FAX (800) 657-0855

www.superiordieset.com
messages@superiordieset.com

copyright © 2015 Superior Die Set Corp.
Form-V1.2-FORC-0915