SUPERIOR COMPONENTS®

DIE SET COMPONENTS

Click here for **3D CAD Link**

website

Quick link to
Main Website

catalog

Quick link to
Master Catalog

3D model

Quick link to
3D CAD Link

video

Quick link to
Videos

Note: When viewing the electronic version, simply click on the image in the right hand corner, and the link will automatically take you to 3D CAD Link.

To use 3D CAD Link:

Click on the
Configure & Download Button

(Login required) Configure & Download

Login to your account

Welcome **Guest** [Login | Register]

Finish your product configuration

uncontrolled if printed or downloaded

TABLE OF CONTENTS
TYPE D DIE SET COMPONENTS

INCH	DESCRIPTION	PAGES
311 / 312	DEMOUNTABLE SHOULDER BUSHINGS (STEEL & BRONZE)	5010
313P	DEMOUNTABLE SHOULDER BUSHINGS (BRONZE-RITE™)	5020
313	DEMOUNTABLE SHOULDER BUSHINGS - LAMINA™ STD (BRONZE-RITE™)	5030
314/316	PF SHOULDER BUSHINGS (STEEL & BRONZE)	5040
315/317	PF SLEEVE BUSHINGS (STEEL & BRONZE)	5050
321	PF STRIAGHT GUIDE PINS	5060
322	DEMT GUIDE PINS	5070
323	SHOULDER GUIDE PINS	5080
331	BB PF STRAIGHT GUIDE PINS (TYPE A)	5090-5100
331M	BB PF STRAIGHT GUIDE PINS (MAXICAGE™)	5110-5120
332	DEMOUNTABLE BB GUIDE PINS (TYPE A)	5130
332M	DEMOUNTABLE BB GUIDE PINS (MAXICAGE™)	5140
334/434	END CAP DIMENSIONS (INCH/METRIC)	5145
335	BB CAGES (TYPE A)	5150
336	BB DEMOUNTABLE SHOULDER BUSHINGS	5160
337	BB PF SLEEVE BUSHINGS	5170

METRIC	DESCRIPTION	PAGES
411/412	DEMOUNTABLE SHOULDER BUSHINGS (STEEL & BRONZE)	5180
413	DEMOUNTABLE SHOULDER BUSHINGS - LAMINA™ STD (BRONZE-RITE™)	5190
414/416	PF SHOULDER BUSHINGS (STEEL & BRONZE)	5200
415/417	PF SLEEVE BUSHINGS (STEEL & BRONZE)	5210
421	PF STRIAGHT GUIDE PINS	5220
422	DEMT GUIDE PINS	5230
423	SHOULDER GUIDE PINS	5240
431	BB GUIDE PINS (TYPE A)	5250-5260
431M	BB GUIDE PINS (MAXICAGE™)	5270-5280
432	DEMOUNTABLE BB GUIDE PINS (TYPE A)	5290
432M	DEMOUNTABLE BB GUIDE PINS (MAXICAGE™)	5300
334/434	END CAP DIMENSIONS (INCH/METRIC)	5145
435	BB CAGES (TYPE A)	5310
436	BB DEMOUNTABLE SHOULDER BUSHINGS	5320
437	BB PF SLEEVE BUSHINGS	5330

OTHER		
390/392	DIE SET SHANKS	5340
N-SERIES	WEAR PLATE DIMENSIONAL DATA	5350
N-SERIES	PART NUMBERS	5360
NAAMS	WEAR DIMENSIONAL DATA (METRIC)	5370
NAAMS	PART NUMBERS (METRIC)	5380
DS	GORTITE® DIE SET SHIELDS	5390
PBR/L	PRY BARS & LUBRIPLATE™	5400

DEMOUNTABLE SHOULDER BUSHINGS STEEL & BRONZE

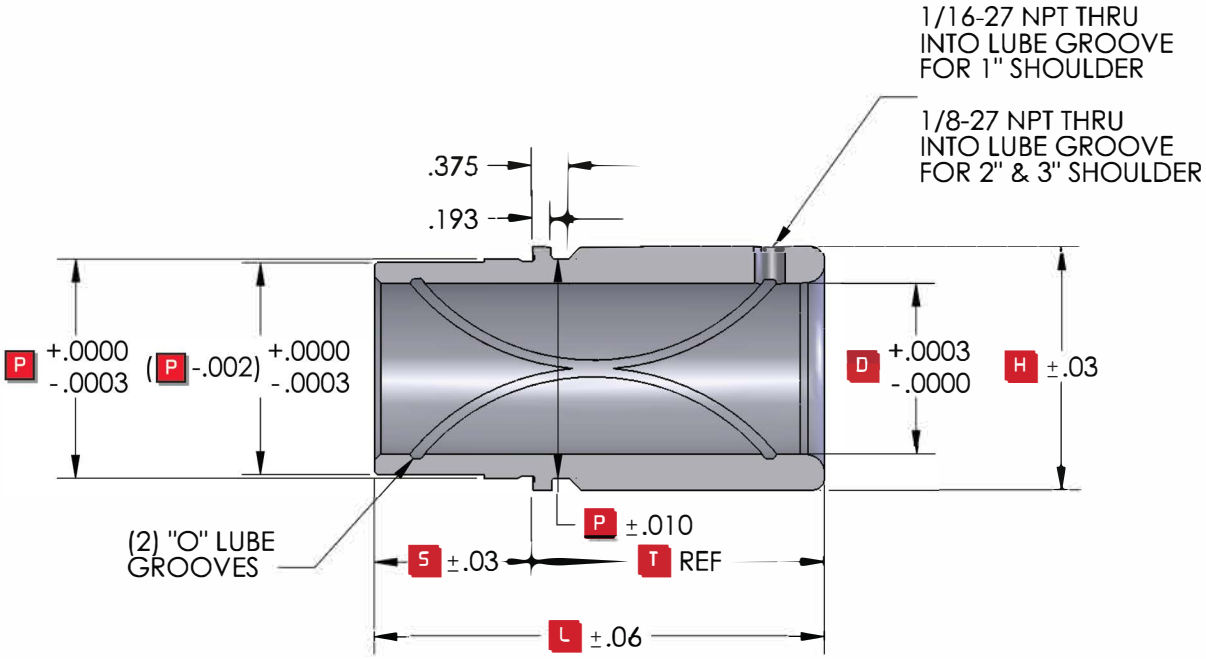

Diameter	D	P	H
3/4"	.7503	1.1253	1.38
1"	1.0003	1.5003	1.75
1 1/4"	1.2504	1.7503	2.00
1 1/2"	1.5005	2.0003	2.25
1 3/4"	1.7506	2.2503	2.50
2"	2.0007	2.5003	2.75
2 1/2"	2.5008	3.1253	3.38
3"	3.0010	3.6253	3.88

WHEN ORDERING PLEASE SPECIFY:

1. Part Number
2. Quantity

Hardened to 60 +/- 2 Rc

DEMOUNTABLE SHOULDER BUSHINGS - STEEL and BRONZE

Diameter	T = 1"				T = 2"				T = 3"			
	S	L	Steel Part No.	Bronze Part No.	S	L	Steel Part No.	Bronze Part No.	S	L	Steel Part No.	Bronze Part No.
3/4"	.88	1.88	311-0610	312-0610	.88	2.88	311-0620	312-0620	1.13	4.12	311-0630	312-0630
1"	.88	1.88	311-0810	312-0810	.88	2.88	311-0820	312-0820	1.13	4.12	311-0830	312-0830
1 1/4"	1.13	2.12	311-1010	312-1010	1.13	3.12	311-1020	312-1020	1.13	4.12	311-1030	312-1030
1 1/2"	1.13	2.12	311-1210	312-1210	1.13	3.12	311-1220	312-1220	1.38	4.38	311-1230	312-1230
1 3/4"	1.38	2.38	311-1410	312-1410	1.38	3.38	311-1420	312-1420	1.63	4.62	311-1430	312-1430
2"	1.63	2.62	311-1610	312-1610	1.63	3.62	311-1620	312-1620	1.88	4.88	311-1630	312-1630
2 1/2"	1.88	2.88	311-2010	312-2010	1.88	3.88	311-2020	312-2020	1.88	4.88	311-2030	312-2030
3"	2.63	3.62	311-2410	312-2410	2.63	4.62	311-2420	312-2420	2.63	5.62	311-2430	312-2430

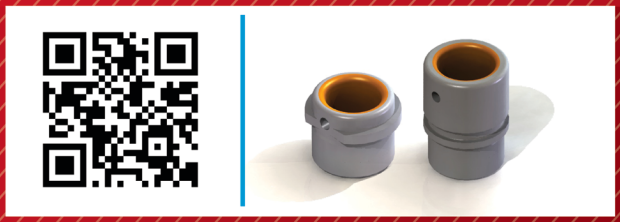

DEMOUNTABLE SHOULDER BUSHINGS

BRONZE-RITE™

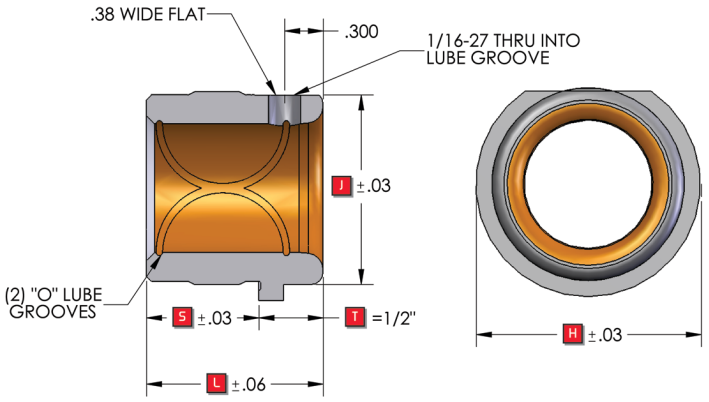

1/2" SHOULDER CONFIGURATION

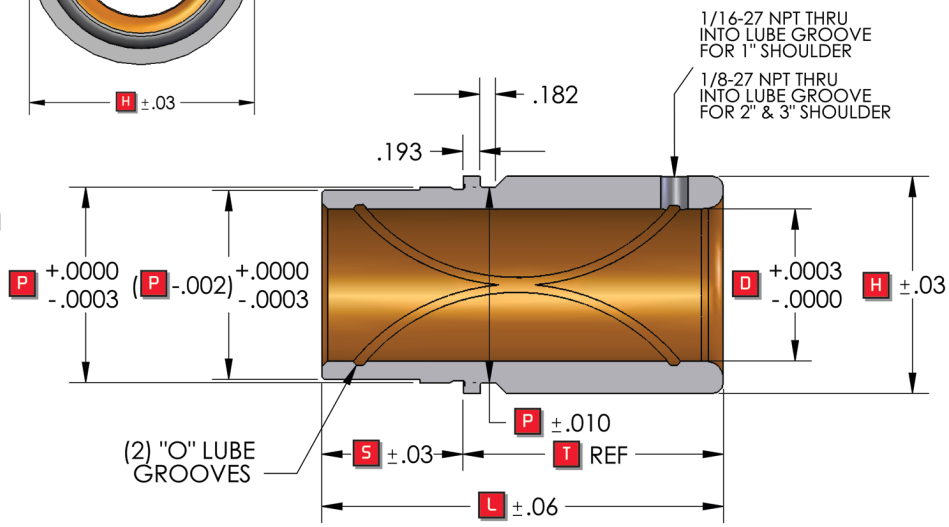

1", 2" & 3" CONFIGURATION

Diameter	D	P	H	J
1"	1.0003	1.5003	1.75	1.50
1 1/4"	1.2504	1.7503	2.00	1.75
1 1/2"	1.5005	2.0003	2.25	2.00
1 3/4"	1.7506	2.2503	2.50	2.25
2"	2.0007	2.5003	2.75	2.50
2 1/2"	2.5008	3.1253	3.38	3.13
3"	3.0010	3.6253	3.88	3.63

WHEN ORDERING PLEASE SPECIFY:

1. Part Number
2. Quantity

Hardened to 60 +/- 2 Rc with Bronze-Rite™ ID

DEMOUNTABLE SHOULDER BUSHINGS - BRONZE-RITE™ - SUPERIOR STANDARD

Diameter	T = 1/2"			T = 1"			T = 2"			T = 3"		
	S	L	Part No.	S	L	Part No.	S	L	Part No.	S	L	Part No.
1"	.88	1.38	313P0805	.88	1.88	313P0810	.88	2.88	313P0820	1.13	4.12	313P0830
1 1/4"	1.13	1.62	313P1005	1.13	2.12	313P1010	1.13	3.12	313P1020	1.13	4.12	313P1030
1 1/4"	1.88	2.38	313P1005L									
1 1/2"	1.13	1.62	313P1205	1.13	2.12	313P1210	1.13	3.12	313P1220	1.38	4.38	313P1230
1 1/2"	1.88	2.38	313P1205L									
1 3/4"	1.38	1.88	313P1405	1.38	2.38	313P1410	1.38	3.38	313P1420	1.63	4.62	313P1430
2"	1.63	2.12	313P1605	1.63	2.62	313P1610	1.63	3.62	313P1620	1.88	4.88	313P1630
2 1/2"	1.88	2.38	313P2005	1.88	2.88	313P2010	1.88	3.88	313P2020	1.88	4.88	313P2030
2 1/2"	3.62	4.12	313P2005L									
3"	2.63	3.12	313P2405	2.63	3.62	313P2410	2.63	4.62	313P2420	2.63	5.62	313P2430
3"	4.62	5.12	313P2405L									

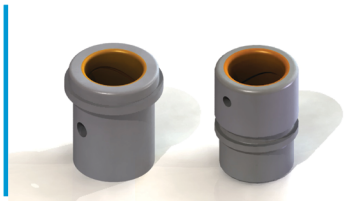

DEMOUNTABLE SHOULDER BUSHINGS - LAMINA™ STANDARD

BRONZE-RITE®

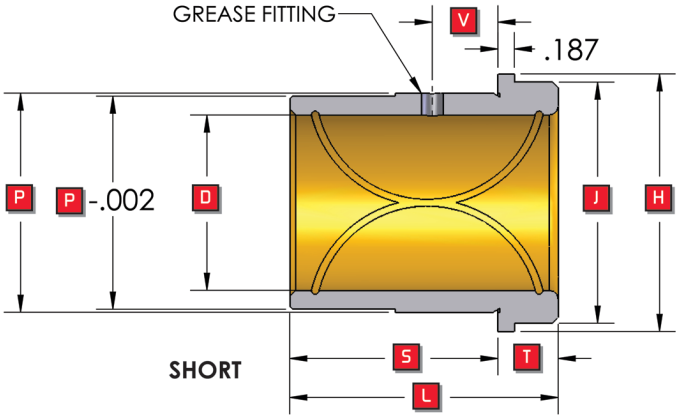

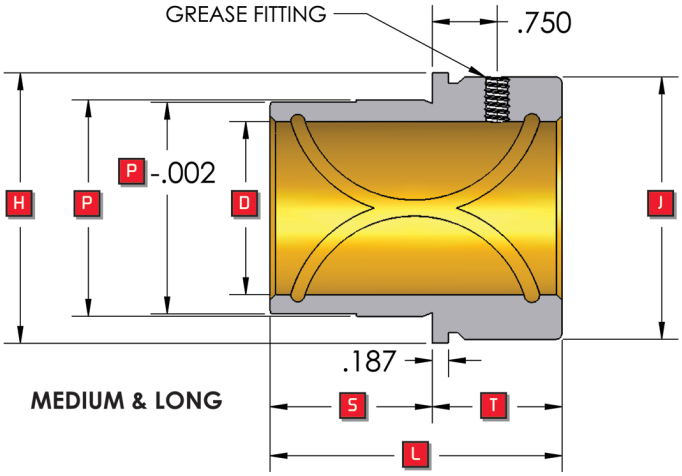

WHEN ORDERING PLEASE SPECIFY:

1. Part Number
2. Quantity

Hardened to 60 +/- 2 Rc with Bronze-Rite™ ID

DEMOUNTABLE SHOULDER BUSHINGS - BRONZE-RITE™ - LAMINA™ STANDARD

Diameter	T = Short Shoulder								
	D	P	H	J	S	T	L	V	Part No.
1"	1.0003	1.5003	1.75	1.56	1.38	.50	1.88	0.75	313-0810
1 1/4"	1.2504	1.7503	2.12	1.94	1.88	.50	2.38	0.75	313-1010
1 1/2"	1.5005	2.0003	2.38	2.19	1.88	.50	2.38	0.75	313-1210
1 3/4"	1.7506	2.2503	2.62	2.44	2.38	.50	2.88	0.75	313-1410
2"	2.0007	2.5003	2.94	2.75	2.38	.50	2.88	0.75	313-1610
2 1/2"	2.5008	3.0003	3.38	3.19	2.62	.38	3.00	1.25	313-2010
3"	3.0010	3.5003	3.88	3.68	3.62	.38	4.00	1.25	313-2410

DEMOUNTABLE SHOULDER BUSHINGS - BRONZE-RITE™ - LAMINA™ STANDARD

Diameter	T = Medium Shoulder								
	D	P	H	J	S	T	L	V	Part No.
1"	1.0003	1.5003	1.75	1.66	.88	1.25	2.12	.75	313-0820
1 1/4"	1.2504	1.7503	2.12	2.03	1.12	1.50	2.62	.75	313-1020
1 1/2"	1.5005	2.0003	2.38	2.28	1.38	1.50	2.88	.75	313-1220
1 3/4"	1.7506	2.2503	2.62	2.53	1.62	1.50	3.12	.75	313-1420
2"	2.0007	2.5003	3.12	3.03	1.88	1.50	3.38	.75	313-1620
2 1/2"	2.5008	3.0003	3.62	3.53	1.88	2.00	3.88	.75	313-2020
3"	3.0010	3.6253	4.38	4.28	1.88	2.00	3.88	.75	313-2420

DEMOUNTABLE SHOULDER BUSHINGS - BRONZE-RITE™ - LAMINA™ STANDARD

Diameter	T = Long Shoulder								
	D	P	H	J	S	T	L	V	Part No.
1"	1.0003	1.5003	1.75	1.66	.88	2.25	3.12	0.75	313-0830
1 1/4"	1.2504	1.7503	2.12	2.03	1.12	2.38	3.50	0.75	313-1030
1 1/2"	1.5005	2.0003	2.38	2.28	1.38	2.75	4.12	0.75	313-1230
1 3/4"	1.7506	2.2503	2.62	2.53	1.62	3.00	4.62	0.75	313-1430
2"	2.0007	2.5003	3.12	3.03	1.62	3.00	4.62	0.75	313-1630
2 1/2"	2.5008	3.0003	3.62	3.53	1.88	3.50	5.38	0.75	313-2030
3"	3.0010	3.6253	4.38	4.28	1.88	4.00	5.88	0.75	313-2430

PRESS FIT SHOULDER BUSHINGS — STEEL & BRONZE

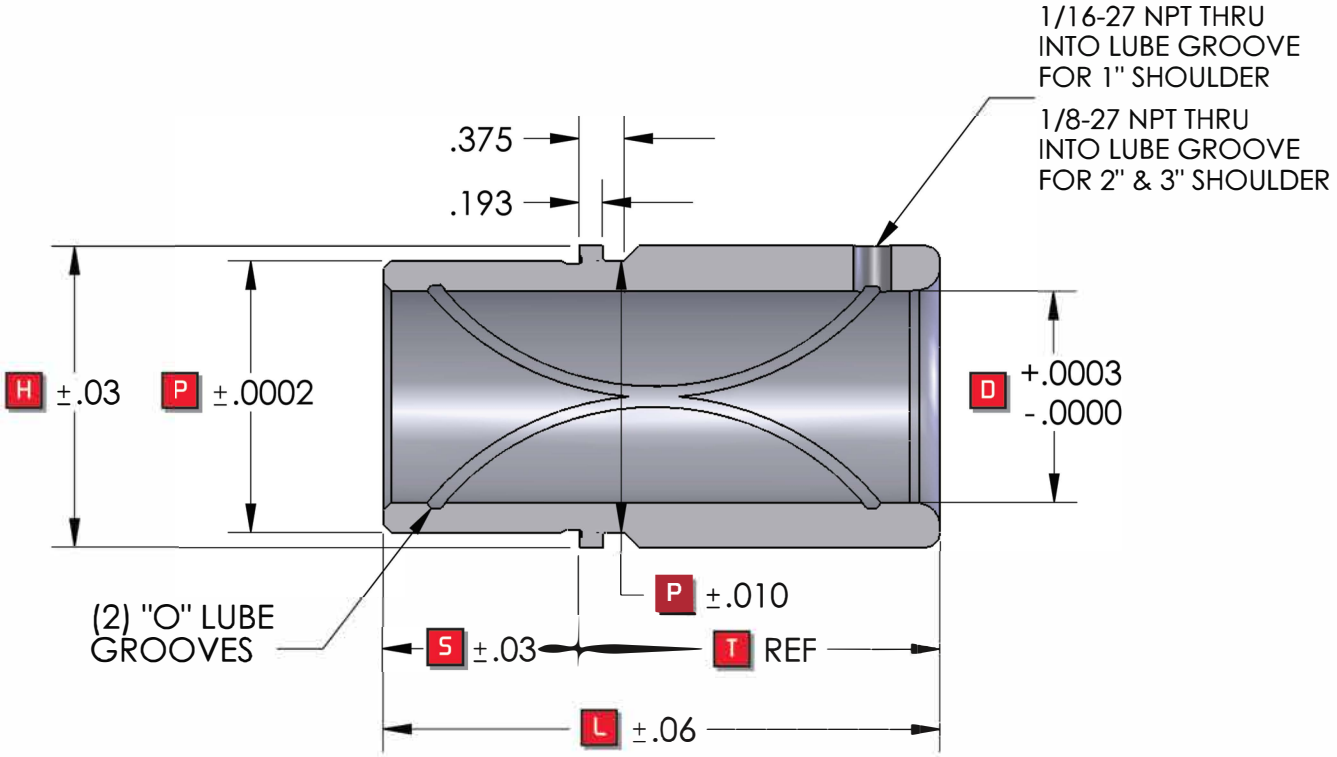

Diameter	D	P	H
3/4"	.7507	1.1265	1.38
1"	1.0003	1.5023	1.75
1 1/4"	1.2504	1.7523	2.00
1 1/2"	1.5005	2.0024	2.25
1 3/4"	1.7506	2.2528	2.50
2"	2.0007	2.5028	2.75
2 1/2"	2.5008	3.1278	3.38
3"	3.0010	3.6280	3.88

WHEN ORDERING PLEASE SPECIFY:

1. Part Number
2. Quantity

Hardened to 60 +/- 2 Rc

PRESS FIT SHOULDER BUSHINGS - STEEL and BRONZE

Diameter	T = 1"				T = 2"				T = 3"			
	S	L	Steel Part No.	Bronze Part No.	S	L	Steel Part No.	Bronze Part No.	S	L	Steel Part No.	Bronze Part No.
3/4"	.88	1.88	314-0610	316-0610	.88	2.88	314-0620	316-0620	1.13	4.12	314-0630	316-0630
1"	.88	1.88	314-0810	316-0810	.88	2.88	314-0820	316-0820	1.13	4.12	314-0830	316-0830
1 1/4"	1.13	2.12	314-1010	316-1010	1.13	3.12	314-1020	316-1020	1.13	4.12	314-1030	316-1030
1 1/2"	1.13	2.12	314-1210	316-1210	1.13	3.12	314-1220	316-1220	1.38	4.38	314-1230	316-1230
1 3/4"	1.38	2.38	314-1410	316-1410	1.38	3.38	314-1420	316-1420	1.63	4.62	314-1430	316-1430
2"	1.63	2.62	314-1610	316-1610	1.63	3.62	314-1620	316-1620	1.88	4.88	314-1630	316-1630
2 1/2"	1.88	2.88	314-2010	316-2010	1.88	3.88	314-2020	316-2020	1.88	4.88	314-2030	316-2030
3"	2.63	3.62	314-2410	316-2410	2.63	4.62	314-2420	316-2420	2.63	5.62	314-2430	316-2430

PRESS FIT STRAIGHT SLEEVE BUSHINGS STEEL & BRONZE

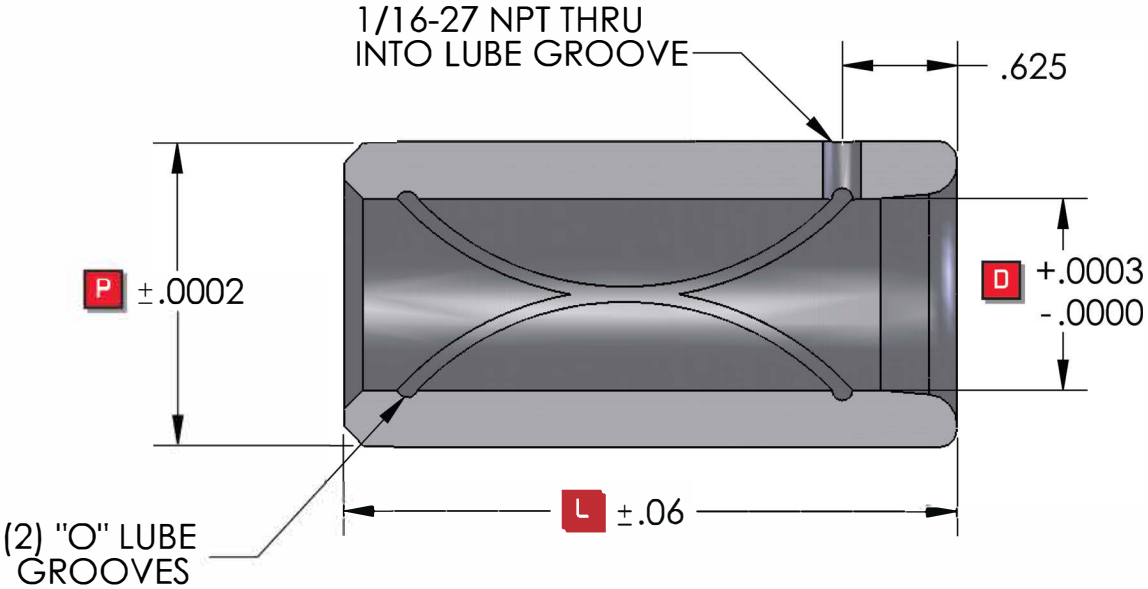

Diameter	D	P
3/4"	.7507	1.1265
1"	1.0003	1.5023
1 1/4"	1.2504	1.7523
1 1/2"	1.5005	2.0024
1 3/4"	1.7506	2.2528
2"	2.0007	2.5028
2 1/2"	2.5008	3.1278
3"	3.0010	3.6280

WHEN ORDERING PLEASE SPECIFY:

1. Part Number
2. Quantity

Hardened to 60 +/- 2 Rc

PRESS FIT STRAIGHT SLEEVE BUSHINGS - STEEL and BRONZE

Diameter	L = 2"		L = 2 1/2"		L = 3"	
	Steel Part No.	Bronze Part No.	Steel Part No.	Bronze Part No.	Steel Part No.	Bronze Part No.
3/4"	315-0604	317-0604	315-0605	317-0605	315-0606	317-0606
1"	315-0804	317-0804	315-0805	317-0805	315-0806	317-0806
1 1/4"	315-1004	317-1004	315-1005	317-1005	315-1006	317-1006
1 1/2"	315-1204	317-1204	315-1205	317-1205	315-1206	317-1206
1 3/4"	315-1404	317-1404	315-1405	317-1405	315-1406	317-1406
2"	315-1604	317-1604	315-1605	317-1605	315-1606	317-1606
2 1/2"	315-2004	317-2004	315-2005	317-2005	315-2006	317-2006
3"	315-2404	317-2404	315-2405	317-2405	315-2406	317-2406

PRESS FIT STRAIGHT GUIDE PINS

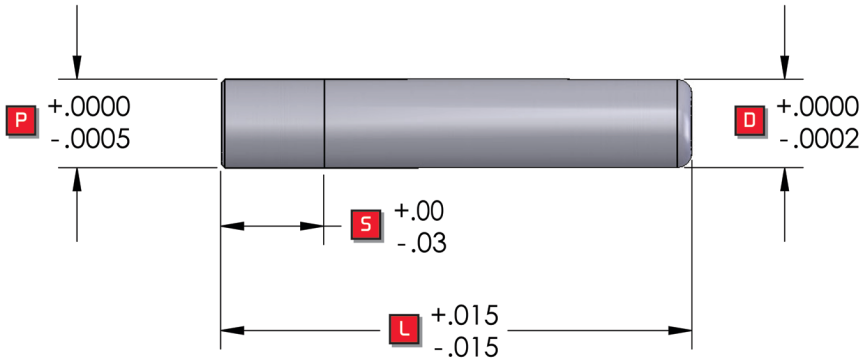

Diameter	D	P	S
3/4"	.7502	.7520	1.12
1	1.0002	1.0022	1.50
1 1/4"	1.2502	1.2520	1.75
1 1/2"	1.5002	1.5025	1.75
1 3/4"	1.7502	1.7530	2.25
2"	2.0002	2.0030	2.50
2 1/2"	2.5002	2.5030	3.00
3"	3.0002	3.0030	3.50

WHEN ORDERING PLEASE SPECIFY:

1. Part Number
2. Quantity

Hardened to 60 +/- 2 Rc

PRESS FIT STRAIGHT PINS

L	DIA=3/4"	DIA=1"	DIA= 1 1/4"	DIA=1 1/2"	DIA=1 3/4"	DIA=2"	DIA=2 1/2"	DIA=3"
	PART NO.	PART NO.	PART NO.	PART NO.	PART NO.	PART NO.	PART NO.	PART NO.
3.250	321-0613	321-0813						
3.500	321-0614	321-0814						
4.000	321-0616	321-0816	321-1016	321-1216				
4.250	321-0617	321-0817	321-1017	321-1217				
4.500	321-0618	321-0818	321-1018	321-1218	321-1418	321-1618		
4.750	321-0619	321-0819	321-1019	321-1219	321- 1419	321-1619		
5.000	321-0620	321-0820	321-1020	321-1220	321-1420	321-1620		
5.250	321-0621	321-0821	321-1021	321-1221	321-1421	321-1621		
5.500	321-0622	321-0822	321-1022	321-1222	321-1422	321-1622		
5.750	321-0623	321-0823	321-1023	321-1223	321-1423	321-1623		
6.000	321-0624	321-0824	321-1024	321-1224	321-1424	321-1624	321-2024	321-2424
6.250	321-0625	321-0825	321-1025	321-1225	321-1425	321-1625	321-2025	321-2425
6.500	321-0626	321-0826	321-1026	321-1226	321-1426	321-1626	321-2026	321-2426
6.750	321-0627	321-0827	321-1027	321-1227	321-1427	321-1627	321-2027	321-2427
7.000	321-0628	321-0828	321-1028	321-1228	321-1428	321-1628	321-2028	321-2428
7.250	321-0629	321-0829	321-1029	321-1229	321-1429	321-1629	321-2029	321-2429
7.500	321-0630	321-0830	321-1030	321-1230	321-1430	321-1630	321-2030	321-2430
7.750	321-0631	321-0831	321-1031	321-1231	321-1431	321-1631	321-2031	321-2431
8.000	321-0632	321-0832	321-1032	321-1232	321-1432	321-1632	321-2032	321-2432
8.500	321-0634	321-0834	321-1034	321-1234	321-1434	321-1634	321-2034	321-2434
9.000	321-0636	321-0836	321-1036	321-1236	321-1436	321-1636	321-2036	321-2436
9.500	321-0638	321-0838	321-1038	321-1238	321-1438	321-1638	321-2038	321-2438
10.000	321-0640	321-0840	321-1040	321-1240	321-1440	321-1640	321-2040	321-2440
10.500		321-0842	321-1042	321-1242	321-1442	321-1642	321-2042	321-2442
11 .000		321-0844	321-1044	321-1244	321-1444	321-1644	321-2044	321-2444
11 .500		321-0846	321-1046	321-1246	321-1446	321-1646	321-2046	321-2446
12.000		321-0848	321-1048	321-1248	321-1448	321-1648	321-2048	321-2448
13.000		321-0852	321-1052	321-1252	321-1452	321-1652	321-2052	321-2452
1 4.000		321-0856	321-1056	321-1256	321-1456	321-1656	321-2056	321-2456
15.000			321-1060	321-1260	321-1460	321-1660	321-2060	321-2460
1 6.000				321-1264	321-1464	321-1664	321-2064	321-2464
17.000					321-1468	321-1668	321-2068	321-2468
18.000					321-1472	321-1672	321-2072	321-2472
20.000					321-1480	321-1680	321-2080	321-2480

DEMOUNTABLE GUIDE PINS

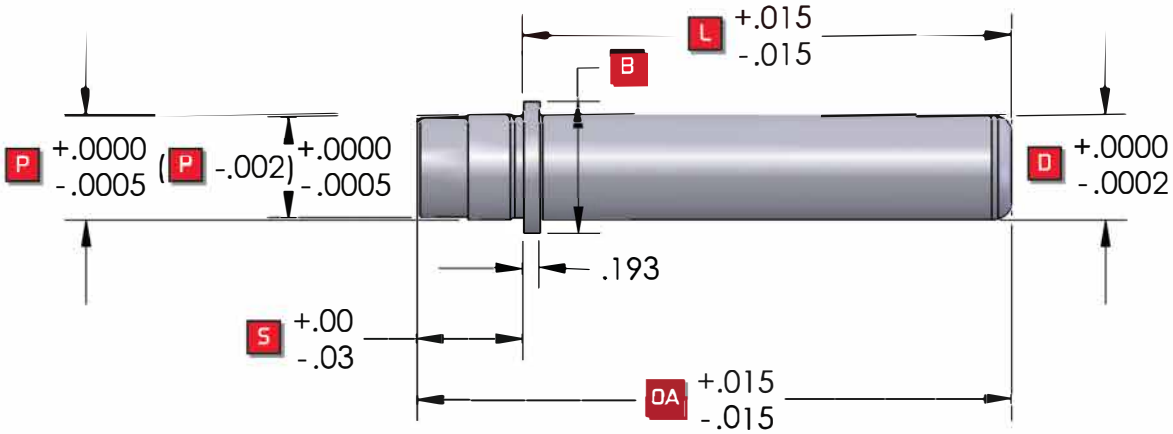

Diameter	D	P	B	S
1"	1.0002	1.0000	1.250	1.19
1 1/4"	1.2502	1.2500	1.500	1.19
1 1/2"	1.5002	1.5000	1.750	1.44
1 3/4"	1.7502	1.7500	2.000	1.69
2"	2.0002	2.0000	2.500	1.94
2 1/2"	2.5002	2.5000	3.000	1.94
3"	3.0002	3.0000	3.500	1.94

WHEN ORDERING PLEASE SPECIFY:

1. Part Number
2. Quantity

"L" Hardened to 60 +/- 2 Rc

DEMOUNTABLE GUIDE PINS

L	Dia = 1"		Dia = 1 1/4"		Dia = 1 1/2"		Dia = 1 3/4"		Dia = 2"		Dia = 2 1/2"		Dia = 3"	
	OA	Part No.	OA	Part No.	OA	Part No.	OA	Part No.	OA	Part No.	OA	Part No.	OA	Part No.
3.000	4.188	322-0812	4.188	322-1012										
3.250	4.438	322-0813	4.438	322-1013										
3.500	4.688	322-0814	4.688	322-1014	4.938	322-1214								
3.750	4.938	322-0815	4.938	322-1015	5.188	322-1215								
4.000	5.188	322-0816	5.188	322-1016	5.438	322-1216	5.688	322-1416	5.938	322-1616				
4.250	5.438	322-0817	5.438	322-1017	5.688	322-1217	5.938	322-1417	6.188	322-1617				
4.500	5.688	322-0818	5.688	322-1018	5.938	322-1218	6.188	322-1418	6.438	322-1618				
4.750	5.938	322-0819	5.938	322-1019	5.988	322-1219	6.438	322-1419	6.688	322-1619				
5.000	6.188	322-0820	6.188	322-1020	6.438	322-1220	6.688	322-1420	6.938	322-1620				
5.500	6.688	322-0822	6.688	322-1022	6.938	322-1222	7.188	322-1422	7.438	322-1622				
6.000	7.188	322-0824	7.188	322-1024	7.438	322-1224	7.688	322-1424	7.938	322-1624	7.938	322-2024	7.938	322-2424
6.500	7.688	322-0826	7.688	322-1026	7.938	322-1226	8.188	322-1426	8.438	322-1626	8.438	322-2026	8.438	322-2426
7.000	8.188	322-0828	8.188	322-1028	8.438	322-1228	8.688	322-1428	8.938	322-1628	8.938	322-2028	8.938	322-2428
7.500	8.688	322-0830	8.688	322-1030	8.938	322-1230	9.188	322-1430	9.438	322-1630	9.438	322-2030	9.438	322-2430
8.000	9.188	322-0832	9.188	322-1032	9.438	322-1232	9.688	322-1432	9.938	322-1632	9.938	322-2032	9.938	322-2432
8.500			9.688	322-1034	9.938	322-1234	10.188	322-1434	10.438	322-1634	10.438	322-2034	10.438	322-2434
9.000			10.188	322-1036	10.438	322-1236	10.688	322-1436	10.938	322-1636	10.938	322-2036	10.938	322-2436
9.500			10.688	322-1038	10.938	322-1238	11.188	322-1438	11.438	322-1638	11.438	322-2038	11.438	322-2438
10.000			11.188	322-1040	11.438	322-1240	11.688	322-1440	11.938	322-1640	11.938	322-2040	11.938	322-2440
11.000							12.688	322-1444	12.938	322-1644	12.938	322-2044	12.938	322-2444
12.000							13.688	322-1448	13.938	322-1648	13.938	322-2048	13.938	322-2448
13.000									14.938	322-1652	14.938	322-2052	14.938	322-2452
14.000									15.938	322-1656	15.938	322-2056	15.938	322-2456
15.000											16.938	322-2060	16.938	322-2460
16.000											17.938	322-2064	17.938	322-2464

SHOULDER GUIDE PINS

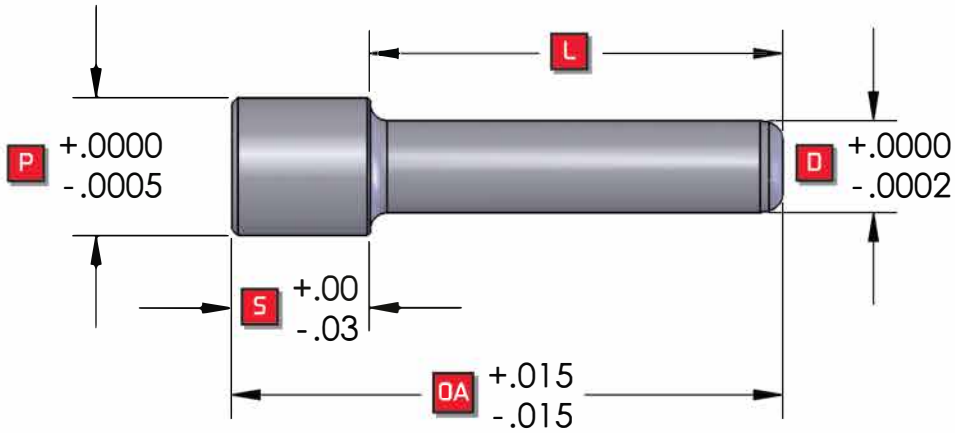

Diameter	D	P	S
1"	1.0002	1.5120	1.50
1 1/4"	1.2502	1.7620	1.75
1 1/2"	1.5002	2.0120	2.00
1 3/4"	1.7502	2.2620	2.25
2"	2.0002	2.5120	3.50
2 1/2"	2.5002	3.0120	4.00
3"	3.0002	3.6370	4.00

WHEN ORDERING PLEASE SPECIFY:

1. Part Number
2. Quantity

Hardened to 60 +/- 2 Rc

SHOULDER GUIDE PINS

OA	Dia = 1"		Dia = 1 1/4"		Dia = 1 1/2"		Dia = 1 3/4"		Dia = 2"		Dia = 2 1/2"		Dia = 3"	
	L	Part No.	L	Part No.	L	Part No.	L	Part No.	L	Part No.	L	Part No.	L	Part No.
5.500	4.000	323-0822												
6.000	4.500	323-0824	4.250	323-1024	4.000	323-1224								
6.500	5.000	323-0826	4.750	323-1026	4.500	323-1226								
7.000	5.500	323-0828	5.250	323-1028	5.000	323-1228								
7.500	6.000	323-0830	5.750	323-1030	5.500	323-1230	5.250	323-1430						
8.000	6.500	323-0832	6.250	323-1032	6.000	323-1232	5.750	323-1432	4.500	323-1632				
8.500	7.000	323-0834	6.750	323-1034	6.500	323-1234	6.250	323-1434	5.000	323-1634				
9.000	7.500	323-0836	7.250	323-1036	7.000	323-1236	6.750	323-1436	5.500	323-1636	5.000	323-2036		
10.000			8.250	323-1040	8.000	323-1240	7.750	323-1440	6.500	323-1640	6.000	323-2040		
11.000			9.250	323-1044	9.000	323-1244	8.750	323-1444	7.500	323-1644	7.000	323-2044	7.000	323-2444
12.000			10.250	323-1048	10.000	323-1248	9.750	323-1448	8.500	323-1648	8.000	323-2048	8.000	323-2448
13.000			11.250	323-1052	11.000	323-1252	10.750	323-1452	9.500	323-1652	9.000	323-2052	9.000	323-2452
14.000			12.250	323-1056	12.000	323-1256	11.750	323-1456	10.500	323-1656	10.000	323-2056	10.000	323-2456
15.000									11.500	323-1660	11.000	323-2060	11.000	323-2460
17.000									13.500	323-1668	13.000	323-2068	13.000	323-2468

BALL BEARING PRESS FIT STRAIGHT GUIDE PINS

TYPE A

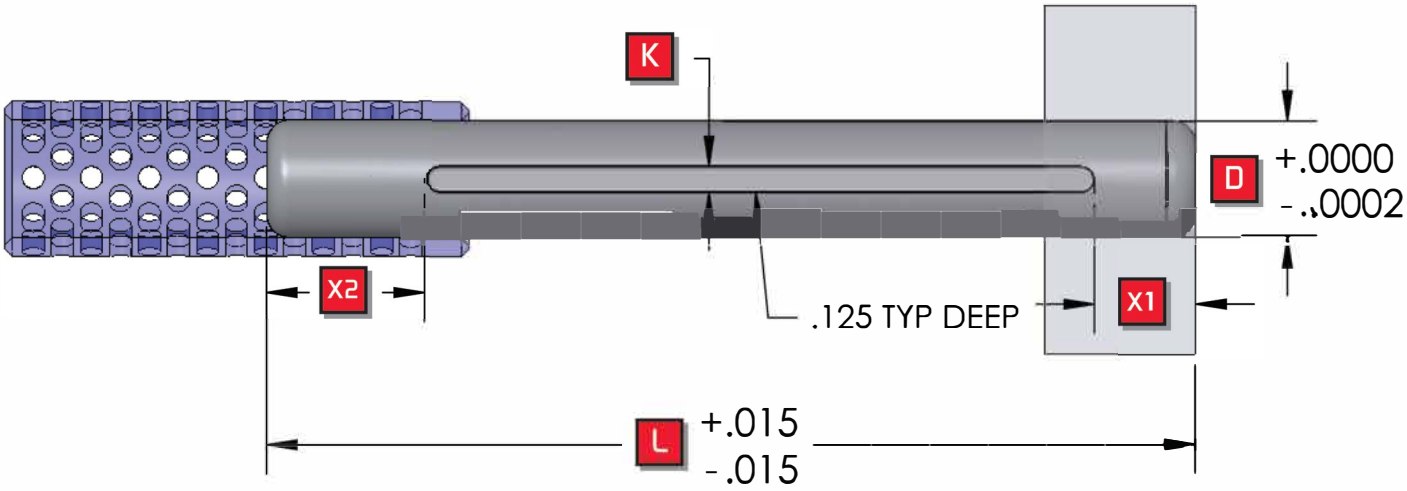

Diameter	D	X1	X2	K
3/4"	.7532	.700	1.000	.219
1"	1.0032	.875	1.375	.219
1 1/4"	1.2532	.875	1.375	.219
1 1/2"	1.5032	1.125	1.625	.219
1 3/4"	1.7532	1.375	1.875	.219
2"	2.0033	1.625	2.000	.219
2 1/2"	2.5033	2.500	3.375	.219
3"	3.0033	2.500	3.375	.219

WHEN ORDERING PLEASE SPECIFY:

1. Part Number
2. Quantity

Hardened to 60 +/- 2 Rc

BALL BEARING PRESS FIT STRAIGHT GUIDE PINS

TYPE A

BALL BEARING PRESS FIT STRAIGHT GUIDE PINS - TYPE A

L	DIA=3/4"	DIA=1"	DIA=1 1/4"	DIA=1 1/2"	DIA=1 3/4"	DIA=2"	DIA=2 1/2"	DIA=3"
	PART NO.	PART NO.	PART NO.	PART NO.	PART NO.	PART NO.	PART NO.	PART NO.
4.000	331-0616	331-0816	331-1016					
4.250	331-0617	331-0817	331-1017	331-1217				
4.500	331-0618	331-0818	331-1018	331-1218				
4.750	331-0619	331-0819	331-1019	331-1219				
5.000	331-0620	331-0820	331-1020	331-1220	331-1420	331-1620		
5.250	331-0621	331-0821	331-1021	331-1221	331-1421	331-1621		
5.500	331-0622	331-0822	331-1022	331-1222	331-1422	331-1622		
5.750	331-0623	331-0823	331-1023	331-1223	331-1423	331-1623		
6.000	331-0624	331-0824	331-1024	331-1224	331-1424	331-1624		
6.250	331-0625	331-0825	331-1025	331-1225	331-1425	331-1625		
6.500	331-0626	331-0826	331-1026	331-1226	331-1426	331-1626		
6.750	331-0627	331-0827	331-1027	331-1227	331-1427	331-1627		
7.000	331-0628	331-0828	331-1028	331-1228	331-1428	331-1628		
7.250	331-0629	331-0829	331-1029	331-1229	331-1429	331-1629		
7.500	331-0630	331-0830	331-1030	331-1230	331-1430	331-1630		
7.750	331-0631	331-0831	331-1031	331-1231	331-1431	331-1631		
8.000	331-0632	331-0832	331-1032	331-1232	331-1432	331-1632	331-2032	331-2432
8.500	331-0634	331-0834	331-1034	331-1234	331-1434	331-1634	331-2034	331-2434
9.000	331-0636	331-0836	331-1036	331-1236	331-1436	331-1636	331-2036	331-2436
9.500	331-0638	331-0838	331-1038	331-1238	331-1438	331-1638	331-2038	331-2438
10 .000	331-0640	331-0840	331-1040	331-1240	331-1440	331-1640	331-2040	331-2440
10 .500	331-0642	331-0842	331-1042	331-1242	331-1442	331-1642	331-2042	331-2442
11 .000	331-0644	331-0844	331-1044	331-1244	331-1444	331-1644	331-2044	331-2444
11 .500	331-0646	331-0846	331-1046	331-1246	331-1446	331-1646	331-2046	331-2446
12 .000	331-0648	331-0848	331-1048	331-1248	331-1448	331-1648	331-2048	331-2448
13 .000						331-1652	331-2052	331-2452
1 4.000						331-1656	331-2056	331-2456
15.000								331-2460
1 6.000								331-2464
17.000								331-2468
18 .000								331-2472
20.000								331-2480

BALL BEARING PRESS FIT STRAIGHT GUIDE PINS

MAXICAGE™

CAGE END

PUNCH HOLDER
OR
"PLATE" END

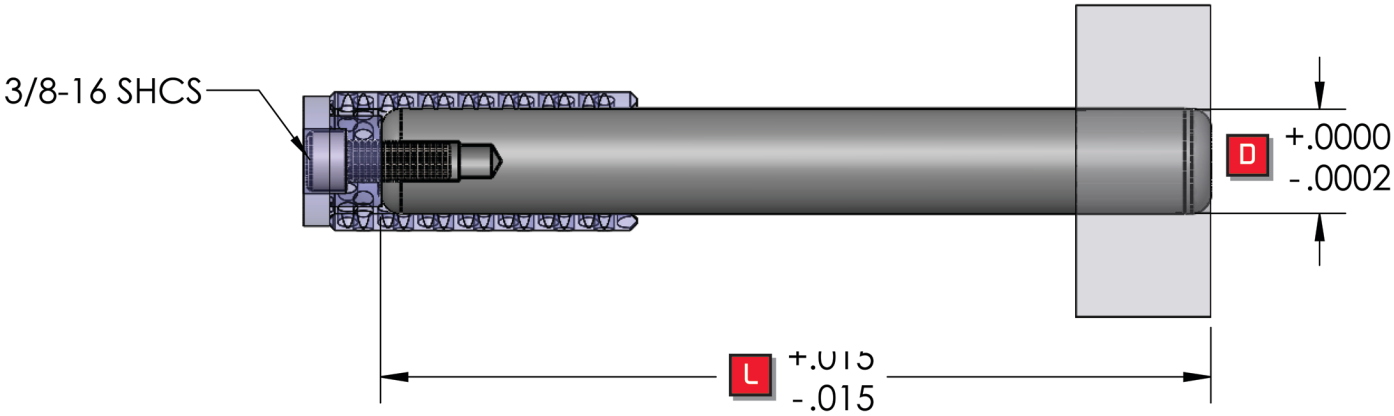

Diameter	D
3/4"	.7532
1"	1.0032
1 1/4"	1.2532
1 1/2"	1.5032
1 3/4"	1.7532
2"	2.0033
2 1/2"	2.5033
3"	3.0033

WHEN ORDERING PLEASE SPECIFY:

1. Part Number
2. Quantity
3. MaxiCage End Cap Sold
   See page 1130

Hardened to 60 +/- 2 Rc

BALL BEARING PRESS FIT STRAIGHT GUIDE PINS

MAXICAGE™

BALL BEARING PRESS FIT STRAIGHT GUIDE PINS - MAXICAGE™

L	DIA=3/4"	DIA=1"	DIA=1 1/4"	DIA=1 1/2"	DIA=1 3/4"	DIA=2"	DIA=2 1/2"	DIA=3"
	PART NO.	PART NO.	PART NO.	PART NO.	PART NO.	PART NO.	PART NO.	PART NO.
4.000	331M0616	331M0816	331M1016					
4.250	331M0617	331M0817	331M1017	331M1217				
4.500	331M0618	331M0818	331M1018	331M1218				
4.750	331M0619	331M0819	331M1019	331M1219				
5.000	331M0620	331M0820	331M1020	331M1220	331M1420	331M1620		
5.250	331M0621	331M0821	331M1021	331M1221	331M1421	331M1621		
5.500	331M0622	331M0822	331M1022	331M1222	331M1422	331M1622		
5.750	331M0623	331M0823	331M1023	331M1223	331M1423	331M1623		
6.000	331M0624	331M0824	331M1024	331M1224	331M1424	331M1624		
6.250	331M0625	331M0825	331M1025	331M1225	331M1425	331M1625		
6.500	331M0626	331M0826	331M1026	331M1226	331M1426	331M1626		
6.750	331M0627	331M0827	331M1027	331M1227	331M1427	331M1627		
7.000	331M0628	331M0828	331M1028	331M1228	331M1428	331M1628		
7.250	331M0629	331M0829	331M1029	331M1229	331M1429	331M1629		
7.500	331M0630	331M0830	331M1030	331M1230	331M1430	331M1630		
7.750	331M0631	331M0831	331M1031	331M1231	331M1431	331M1631		
8.000	331M0632	331M0832	331M1032	331M1232	331M1432	331M1632	331M2032	331M2432
8.500	331M0634	331M0834	331M1034	331M1234	331M1434	331M1634	331M2034	331M2434
9.000	331M0636	331M0836	331M1036	331M1236	331M1436	331M1636	331M2036	331M2436
9.500	331M0638	331M0838	331M1038	331M1238	331M1438	331M1638	331M2038	331M2438
10.000	331M0640	331M0840	331M1040	331M1240	331M1440	331M1640	331M2040	331M2440
10 .500	331M0642	331M0842	331M1042	331M1242	331M1442	331M1642	331M2042	331M2442
11 .000	331M0644	331M0844	331M1044	331M1244	331M1444	331M1644	331M2044	331M2444
11.500	331M0646	331M0846	331M1046	331M1246	331M1446	331M1646	331M2046	331M2446
1 2.000	331M0648	331M0848	331M1048	331M1248	331M1448	331M1648	331M2048	331M2448
13 .000						331M1652	331M2052	331M2452
1 4.000						331M1656	331M2056	331M2456
1 5.000								331M2460
1 6.000								331M2464
1 7.000								331M2468
18 .000								331M2472
20.000								331M2480

DEMOUNTABLE BALL BEARING GUIDE PINS

TYPE A

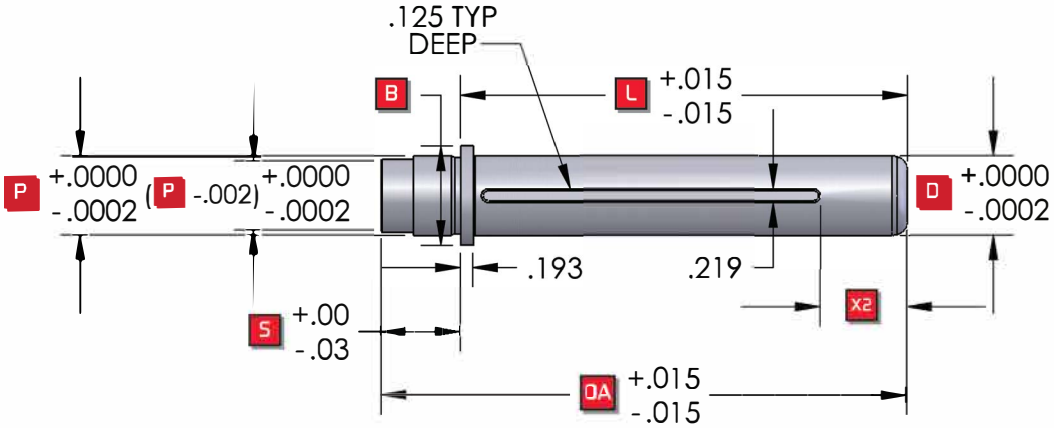

Diameter	D	P	B	S
1"	1.0032	1.0000	1.250	1.19
1 1/4"	1.2532	1.2500	1.500	1.19
1 1/2"	1.5032	1.5000	1.750	1.44
1 3/4"	1.7532	1.7500	2.000	1.69
2"	2.0032	2.0000	2.500	1.94
2 1/2"	2.5032	2.5000	3.000	1.94
3"	3.0032	3.0000	3.500	1.94

WHEN ORDERING PLEASE SPECIFY:

1. Part Number
2. Quantity

"L" Hardened to 60 +/- 2 Rc

DEMOUNTABLE BALL BEARING GUIDE PINS - TYPE A

L	Dia = 1"		Dia = 1 1/4"		Dia = 1 1/2"		Dia = 1 3/4"		Dia = 2"		Dia = 2 1/2"		Dia = 3"	
	X2	Part No.	X2	Part No.	X2	Part No.	X2	Part No.	X2	Part No.	X2	Part No.	X2	Part No.
3.000	.88	332-0812	.88	332-1012										
3.250	.88	332-0813	.88	332-1013										
3.500	.88	332-0814	.88	332-1014	1.12	332-1214								
3.750	.88	332-0815	.88	332-1015	1.12	332-1215								
4.000	1.38	332-0816	1.38	332-1016	1.12	332-1216	1.38	332-1416	1.62	332-1616				
4.250	1.38	332-0817	1.38	332-1017	1.12	332-1217	1.38	332-1417	1.62	332-1617				
4.500	1.38	332-0818	1.38	332-1018	1.62	332-1218	1.38	332-1418	1.62	332-1618				
4.750	1.38	332-0819	1.38	332-1019	1.62	332-1219	1.38	332-1419	1.62	332-1619				
5.000	1.38	332-0820	1.38	332-1020	1.62	332-1220	1.88	332-1420	1.62	332-1620				
5.500	1.38	332-0822	1.38	332-1022	1.62	332-1222	1.88	332-1422	2.00	332-1622				
6.000	1.38	332-0824	1.38	332-1024	1.62	332-1224	1.88	332-1424	2.00	332-1624	2.50	332-2024	2.50	332-2424
6.500	1.38	332-0826	1.38	332-1026	1.62	332-1226	1.88	332-1426	2.00	332-1626	2.50	332-2026	2.50	332-2426
7.000	1.38	332-0828	1.38	332-1028	1.62	332-1228	1.88	332-1428	2.00	332-1628	2.50	332-2028	2.50	332-2428
7.500	1.38	332-0830	1.38	332-1030	1.62	332-1230	1.88	332-1430	2.00	332-1630	2.50	332-2030	2.50	332-2430
8.000	1.38	332-0832	1.38	332-1032	1.62	332-1232	1.88	332-1432	2.00	332-1632	2.50	332-2032	3.38	332-2432
8.500			1.38	332-1034	1.62	332-1234	1.88	332-1434	2.00	332-1634	2.50	332-2034	3.38	332-2434
9.000			1.38	332-1036	1.62	332-1236	1.88	332-1436	2.00	332-1636	3.38	332-2036	3.38	332-2436
9.500			1.38	332-1038	1.62	332-1238	1.88	332-1438	2.00	332-1638	3.38	332-2038	3.38	332-2438
10.000			1.38	332-1040	1.62	332-1240	1.88	332-1440	2.00	332-1640	3.38	332-2040	3.38	332-2440
11.000							1.88	332-1444	2.00	332-1644	3.38	332-2044	3.38	332-2444
12.000							1.88	332-1448	2.00	332-1648	3.38	332-2048	3.38	332-2448
13.000									2.00	332-1652	3.38	332-2052	3.38	332-2452
14.000									2.00	332-1656	3.38	332-2056	3.38	332-2456
15.000											3.38	332-2060	3.38	332-2460
16.000											3.38	332-2064	3.38	332-2464

DEMOUNTABLE BALL BEARING GUIDE PINS

MAXICAGE™

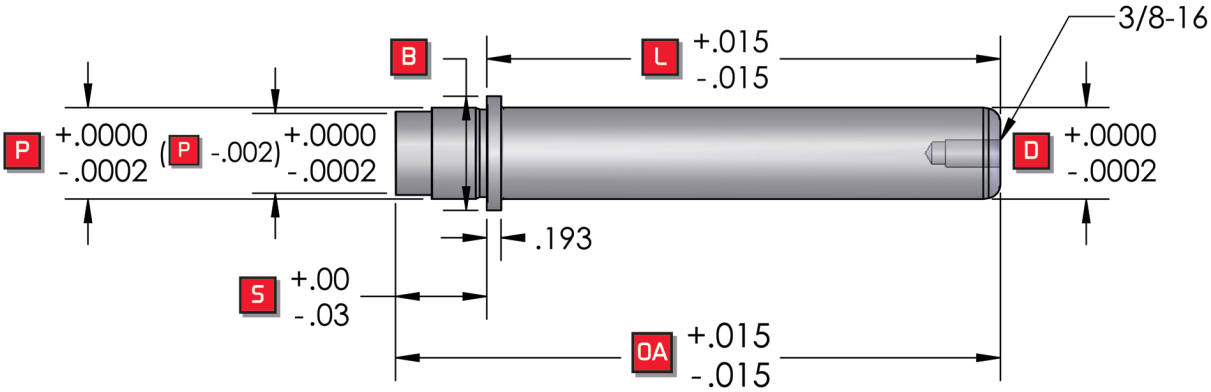

Diameter	D	P	B	S
1"	1.0032	1.0000	1.250	1.19
1 1/4"	1.2532	1.2500	1.500	1.19
1 1/2"	1.5032	1.5000	1.750	1.44
1 3/4"	1.7532	1.7500	2.000	1.69
2"	2.0032	2.0000	2.500	1.94
2 1/2"	2.5032	2.5000	3.000	1.94
3"	3.0032	3.0000	3.500	1.94

WHEN ORDERING PLEASE SPECIFY:

1. Part Number
2. Quantity
3. MaxiCage End Cap Sold Separately
   See page 1130

"L" Hardened to 60 +/- 2 Rc

DEMOUNTABLE BALL BEARING GUIDE PINS - MAXICAGE™

L	Dia = 1"		Dia = 1 1/4"		Dia = 1 1/2"		Dia = 1 3/4"		Dia = 2"		Dia = 2 1/2"		Dia = 3"	
	OA	Part No.	OA	Part No.	OA	Part No.	OA	Part No.	OA	Part No.	OA	Part No.	OA	Part No.
3.000	4.19	332M0812	4.19	332M1012										
3.250	4.44	332M0813	4.44	332M1013										
3.500	4.69	332M0814	4.69	332M1014	4.94	332M1214								
3.750	4.94	332M0815	4.94	332M1015	5.19	332M1215								
4.000	5.19	332M0816	5.19	332M1016	5.44	332M1216	5.69	332M1416	5.94	332M1616				
4.250	5.44	332M0817	5.44	332M1017	5.69	332M1217	5.94	332M1417	6.19	332M1617				
4.500	5.69	332M0818	5.69	332M1018	5.94	332M1218	6.19	332M1418	6.44	332M1618				
4.750	5.94	332M0819	5.94	332M1019	6.19	332M1219	6.44	332M1419	6.69	332M1619				
5.000	6.19	332M0820	6.19	332M1020	6.44	332M1220	6.69	332M1420	6.94	332M1620				
5.500	6.69	332M0822	6.69	332M1022	6.94	332M1222	7.19	332M1422	7.44	332M1622				
6.000	7.19	332M0824	7.19	332M1024	7.44	332M1224	7.69	332M1424	7.94	332M1624	7.94	332M2024	7.94	332M2424
6.500	7.69	332M0826	7.69	332M1026	7.94	332M1226	8.19	332M1426	8.44	332M1626	8.44	332M2026	8.44	332M2426
7.000	8.19	332M0828	8.19	332M1028	8.44	332M1228	8.69	332M1428	8.94	332M1628	8.94	332M2028	8.94	332M2428
7.500	8.69	332M0830	8.69	332M1030	8.94	332M1230	9.19	332M1430	9.44	332M1630	9.44	332M2030	9.44	332M2430
8.000	9.19	332M0832	9.19	332M1032	9.44	332M1232	9.69	332M1432	9.94	332M1632	9.94	332M2032	9.94	332M2432
8.500			9.69	332M1034	9.94	332M1234	10.19	332M1434	10.44	332M1634	10.44	332M2034	10.44	332M2434
9.000			10.19	332M1036	10.44	332M1236	10.69	332M1436	10.94	332M1636	10.94	332M2036	10.94	332M2436
9.500			10.69	332M1038	10.94	332M1238	11.19	332M1438	11.44	332M1638	11.44	332M2038	11.44	332M2438
10.000			11.19	332M1040	11.44	332M1240	11.69	332M1440	11.94	332M1640	11.94	332M2040	11.94	332M2440
11.000							12.69	332M1444	12.94	332M1644	12.94	332M2044	12.94	332M2444
12.000							13.69	332M1448	13.94	332M1648	13.94	332M2048	13.94	332M2448
13.000									14.94	332M1652	14.94	332M2052	14.94	332M2452
14.000									15.94	332M1656	15.94	332M2056	15.94	332M2456
15.000											16.94	332M2060	16.94	332M2460
16.000											17.94	332M2064	17.94	332M2464

BALL BEARING MAXICAGE™ END CAP DIMENSIONS

INCH/METRIC

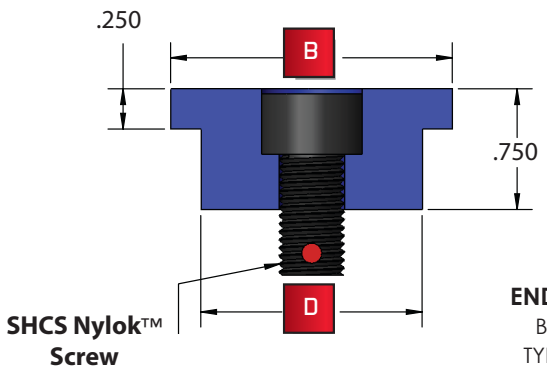

END CAP DIMENSIONS FOR:
BALL BEARING MAXICAGE™
TYPE A PRESS FIT STRAIGHT PINS
& TYPE A DEMOUNTABLE PINS
(INCH & METRIC)

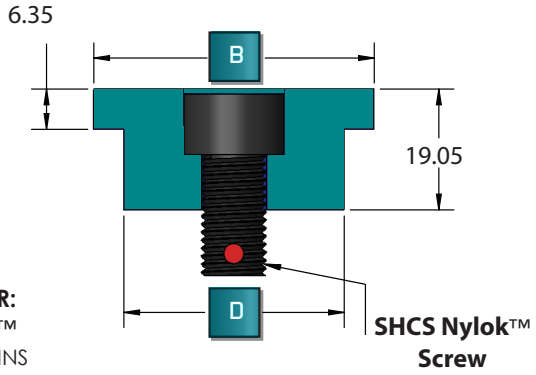

TYPE A - INCH END CAP DIMENSIONS								
Pin Dia.	3/4	1	1 1/4	1 1/2	1 3/4	2	2 1/2	3
Part No.	334-0604	334-0804	334-1004	334-1204	334-1404	334-1604	334-2004	334-2404
D	5/8	7/8	1 1/8	1 3/8	1 5/8	1 7/8	2 3/8	2 7/8
B	1	1 1/4	1 1/2	1 3/4	2	2 3/8	2 7/8	3 3/8
SHCS	5/16"-18 SHCS 1" LONG	3/8"-16 SHCS 1" LONG	3/8"-16 SHCS 1" LONG	3/8"-16 SHCS 1" LONG	3/8"-16 SHCS 1" LONG	3/8"-16 SHCS 1" LONG	3/8"-16 SHCS 1" LONG	3/8"-16 SHCS 1" LONG

TYPE A - METRIC END CAP DIMENSIONS								
Pin Dia.	19	25	32	40	44	50	63	80
Part No.	434-1912	434-2512	434-3212	434-4012	434-4412	434-5012	434-6312	434-8012
D	15,88	22,23	28,58	34,93	41,28	47,63	60,33	73,03
B	25,4	31,75	38,10	44,45	50,80	60,33	73,03	85,73
SHCS	M8x1.25 SHCS 25MM LONG	M10x1.5 SHCS 25MM LONG	M10x1.5 SHCS 25MM LONG	M10x1.5 SHCS 25MM LONG	M10x1.5 SHCS 25MM LONG	M10x1.5 SHCS 25MM LONG	M10x1.5 SHCS 25MM LONG	M10x1.5 SHCS 25MM LONG

NOTES:

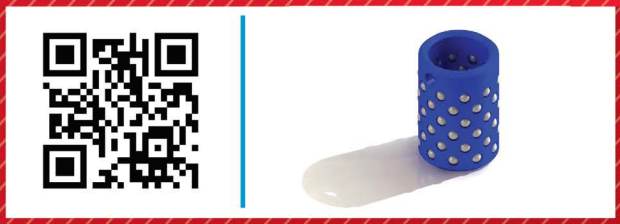

BALL BEARING CAGES

TYPE A

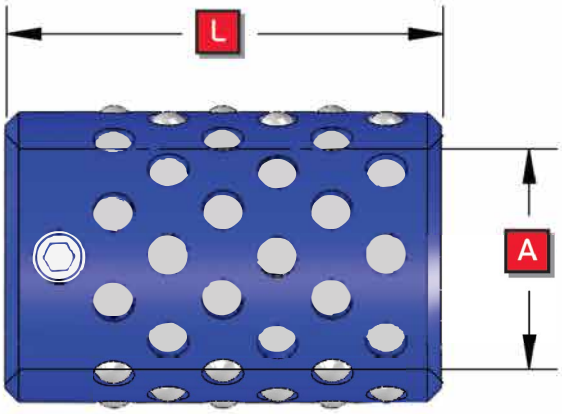

WHEN ORDERING PLEASE SPECIFY:

1. Part Number
2. Quantity

Note:

1. 3/16" ball dia. Pin dia. 3/4" ≤ 1 3/4"
2. 1/4" ball dia. Pin dia. ≥ 2"
3. Two dog point set screws used on cages ≥ 2" dia.

TYPE A BALL BEARING CAGES

Diameter	A	L	Ball Dia	Part No.
3/4"	.760	1.500	.1875	335-0606
3/4"	.760	1.750	.1875	335-0607
3/4"	.760	2.000	.1875	335-0608
3/4"	.760	2.250	.1875	335-0609
3/4"	.760	2.500	.1875	335-0610
1"	1.010	1.500	.1875	335-0806
1"	1.010	1.750	.1875	335-0807
1"	1.010	2.000	.1875	335-0808
1"	1.010	2.250	.1875	335-0809
1"	1.010	2.500	.1875	335-0810
1"	1.010	3.000	.1875	335-0812
1"	1.010	4.000	.1875	335-0816
1 1/4"	1.260	2.000	.1875	335-1008
1 1/4"	1.260	2.250	.1875	335-1009
1 1/4"	1.260	2.500	.1875	335-1010
1 1/4"	1.260	2.750	.1875	335-1011
1 1/4"	1.260	3.000	.1875	335-1012
1 1/4"	1.260	3.250	.1875	335-1013
1 1/4"	1.260	3.500	.1875	335-1014
1 1/4"	1.260	3.750	.1875	335-1015
1 1/2"	1.510	2.000	.1875	335M1208 *
1 1/2"	1.510	2.500	.1875	335-1210
1 1/2"	1.510	2.750	.1875	335-1211
1 1/2"	1.510	3.000	.1875	335-1212
1 1/2"	1.510	3.250	.1875	335-1213
1 1/2"	1.510	3.500	.1875	335-1214
1 1/2"	1.510	3.750	.1875	335-1215

TYPE A BALL BEARING CAGES

Diameter	A	L	Ball Dia	Part No.
1 3/4"	1.760	2.250	.1875	335M1409 *
1 3/4"	1.760	3.000	.1875	335-1412
1 3/4"	1.760	3.250	.1875	335-1413
1 3/4"	1.760	3.500	.1875	335-1414
1 3/4"	1.760	3.750	.1875	335-1415
1 3/4"	1.760	4.000	.1875	335-1416
1 3/4"	1.760	4.250	.1875	335-1417
2"	2.010	2.250	.2500	335M1609 *
2"	2.010	2.750	.2500	335-1611
2"	2.010	3.000	.2500	335-1612
2"	2.010	3.250	.2500	335-1613
2"	2.010	3.500	.2500	335-1614
2"	2.010	3.750	.2500	335-1615
2"	2.010	4.000	.2500	335-1616
2"	2.010	4.250	.2500	335-1617
2"	2.010	4.500	.2500	335-1618
2 1/2"	2.510	3.250	.2500	335-2013
2 1/2"	2.510	4.000	.2500	335-2016
2 1/2"	2.510	4.500	.2500	335-2018
2 1/2"	2.510	5.000	.2500	335-2020
2 1/2"	2.510	6.000	.2500	335-2024
2 1/2"	2.510	7.000	.2500	335-2028
3"	3.010	5.000	.2500	335-2420
3"	3.010	6.000	.2500	335-2424
3"	3.010	7.000	.2500	335-2428

* For Maxi-Cage System only

BALL BEARING DEMOUNTABLE SHOULDER BUSHINGS

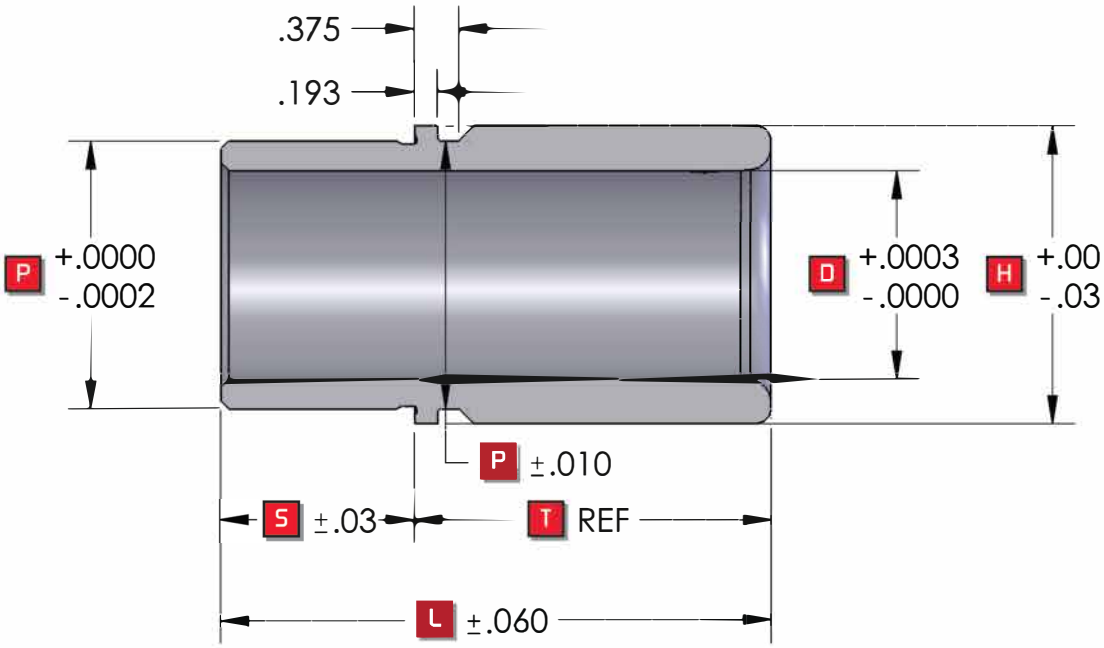

Diameter	D	P	S	H
1"	1.3774	1.7162	1.13	2.00
1 1/4"	1.6274	2.1062	1.38	2.38
1 1/2"	1.8775	2.4362	1.38	2.69
1 3/4"	2.1275	2.7462	1.63	3.00
2"	2.5025	3.1612	1.88	3.56
2 1/2"	3.0025	3.6812	1.88	4.06
3"	3.5025	4.1812	2.38	4.50

WHEN ORDERING PLEASE SPECIFY:

1. Part Number
2. Quantity

Hardened to 60 +/- 2 Rc

BALL BEARING DEMOUNTABLE SHOULDER BUSHINGS

Diameter	T = 1"		T = 2"		T = 3"		T = 4"		T = 5"		T = 6"	
	L	Part No.	L	Part No.	L	Part No.	L	Part No.	L	Part No.	L	Part No.
1"	2.125	336-0810	3.125	336-0820	4.125	336-0830	5.125	336-0840	6.125	336-0850	7.125	336-0860
1 1/4"	2.375	336-1010	3.375	336-1020	4.375	336-1030	5.375	336-1040	6.375	336-1050	7.375	336-1060
1 1/2"	2.375	336-1210	3.375	336-1220	4.375	336-1230	5.375	336-1240	6.375	336-1250	7.375	336-1260
1 3/4"	2.625	336-1410	3.625	336-1420	4.625	336-1430	5.625	336-1440	6.625	336-1450	7.625	336-1460
2"	2.875	336-1610	3.875	336-1620	4.875	336-1630	5.875	336-1640	6.875	336-1650	7.875	336-1660
2 1/2"	2.875	336-2010	3.875	336-2020	4.875	336-2030	5.875	336-2040	6.875	336-2050	7.875	336-2060
3"			4.375	336-2420	5.375	336-2430	6.375	336-2440	7.375	336-2450	8.375	336-2460

BALL BEARING PRESS FIT STRAIGHT BUSHINGS

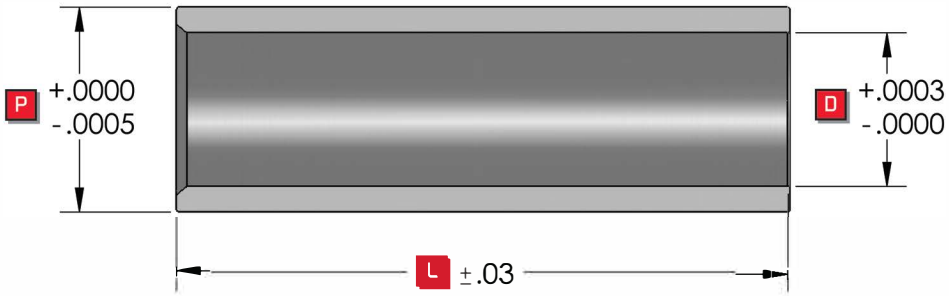

Diameter	D	P
3/4"	1.1270	1.3870
1"	1.3774	1.7180
1 1/4"	1.6274	2.1080
1 1/2"	1.8775	2.4380
1 3/4"	2.1275	2.7480
2"	2.5025	3.1630
2 1/2"	3.0025	3.683
3"	3.5025	4.1830

WHEN ORDERING PLEASE SPECIFY:

1. Part Number
2. Quantity

Hardened to 60 +/- 2 Rc

BALL BEARING PRESS FIT STRAIGHT BUSHINGS

L	Dia = 3/4" Part No.	Dia = 1" Part No.	Dia = 1 1/4" Part No.	Dia = 1 1/2" Part No.	Dia = 1 3/4" Part No.	Dia = 2" Part No.	Dia = 2 1/2" Part No.	Dia = 3" Part No.
1.00								
1.50								
2.00	337-0608	337-0808						
2.50	337-0610	337-0810						
3.00	337-0612	337-0812	337-1012	337-1212	337-1412	337-1612		
3.50	337-0614	337-0814	337-1014	337-1214	337-1414	337-1614		
4.00	337-0616	337-0816	337-1016	337-1216	337-1416	337-1616		
4.50	337-0618	337-0818	337-1018	337-1218	337-1418	337-1618		
5.00	337-0620	337-0820	337-1020	337-1220	337-1420	337-1620	337-2020	
5.50	337-0622	337-0822	337-1022	337-1222	337-1422	337-1622	337-2022	
6.00			337-1024	337-1224	337-1424	337-1624	337-2024	337-2424
6.50			337-1026	337-1226	337-1426	337-1626	337-2026	337-2426
7.00			337-1028	337-1228	337-1428	337-1628	337-2028	337-2428
7.50			337-1030	337-1230	337-1430	337-1630	337-2030	337-2430
8.00			337-1032	337-1232	337-1432	337-1632	337-2032	337-2432
8.50				337-1234	337-1434	337-1634	337-2034	337-2434
9.00				337-1236	337-1436	337-1636	337-2036	337-2436
9.50					337-1438	337-1638	337-2038	337-2438
10.00					337-1440	337-1640	337-2040	337-2440
11.00					337-1444	337-1644	337-2044	337-2444
12.00								337-2448
13.00								337-2452
14.00								337-2456

DEMOUNTABLE SHOULDER BUSHINGS - STEEL & BRONZE

METRIC

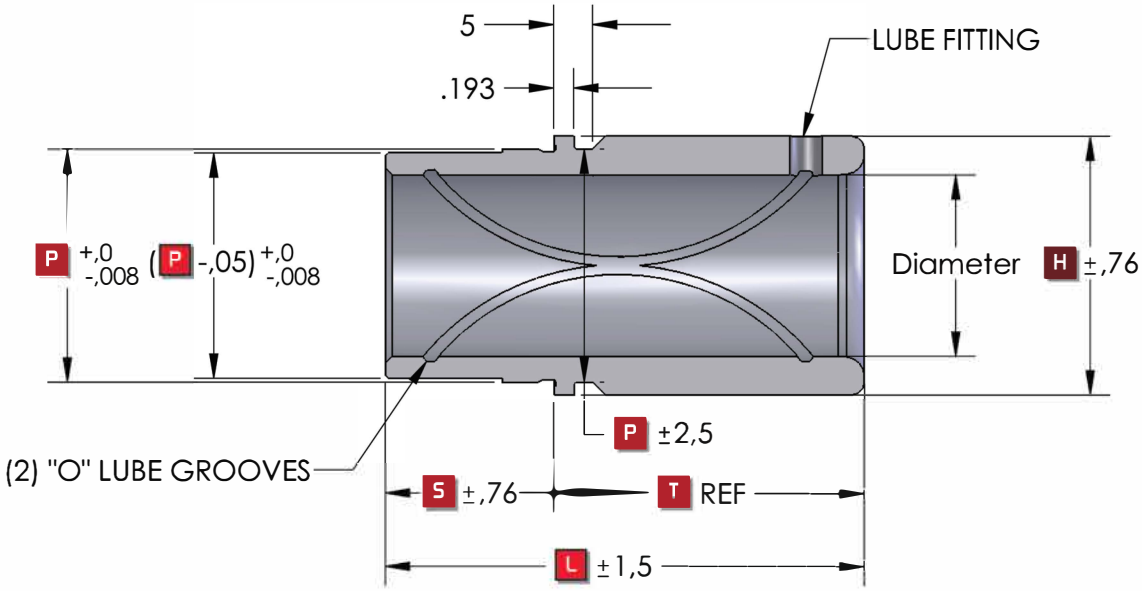

Diameter	P	H
19	28	32
25	38	43
32	45	50
40	54	59
44	58	65
50	65	75
63	81	91
80	100	110

WHEN ORDERING PLEASE SPECIFY:

1. Part Number
2. Quantity

Hardened to 60 +/- 2 Rc

DEMOUNTABLE SHOULDER BUSHINGS - STEEL and BRONZE - METRIC

Diameter	T = 25				T = 50				T = 75			
	S	L	Steel Part No.	Bronze Part No.	S	L	Steel Part No.	Bronze Part No.	S	L	Steel Part No.	Bronze Part No.
19	18	43	411-19025	412-19025	18	68	411-19050	412-19050	18	93	411-19075	412-19075
25	22	47	411-25025	412-25025	22	72	411-25050	412-25050	22	97	411-25075	412-25075
32	25	50	411-32025	412-32025	25	75	411-32050	412-32050	25	100	411-32075	412-32075
40	35	60	411-40025	412-40025	35	85	411-40050	412-40050	35	110	411-40075	412-40075
44	35	60	411-44025	412-44025	35	85	411-44050	412-44050	35	110	411-44075	412-44075
50	45	70	411-50025	412-50025	45	95	411-50050	412-50050	45	120	411-50075	412-50075
63	45	70	411-63025	412-63025	45	95	411-63050	412-63050	45	120	411-63075	412-63075
80	45	70	411-80025	412-80025	45	95	411-80050	412-80050	45	120	411-80075	412-80075

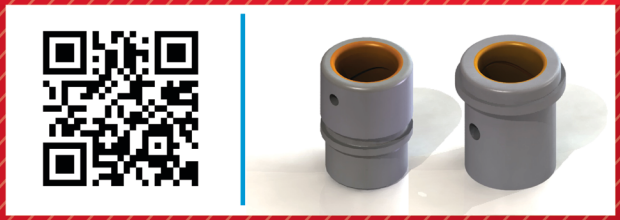

DEMOUNTABLE SHOULDER BUSHINGS - LAMINA™ STANDARD (BRONZE-RITE™) METRIC

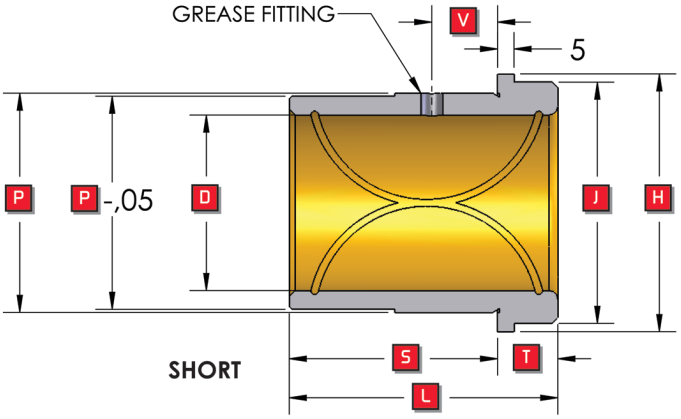

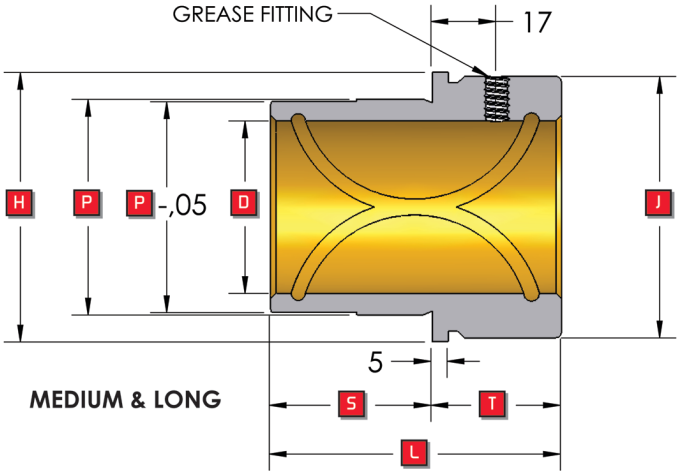

WHEN ORDERING PLEASE SPECIFY:

1. Part Number
2. Quantity

Hardened to 60 +/- 2 Rc with Bronze-Rite™ ID

DEMOUNTABLE SHOULDER BUSHINGS - BRONZE-RITE™ - LAMINA STANDARD™ - METRIC

Diameter	T = Short Shoulder							
	P	H	J	S	T	L	V	Part No.
19	28	34	29	18	13	31	8	413-19025
25	38	44	39	23	13	36	12	413-25025
32	45	53	48	30	13	43	15	413-32025
40	54	63	58	36	13	49	19	413-40025
50	65	79	74	46	13	59	19	413-50025
63	81	92	87	61	13	74	19	413-63025
80	100	111	106	76	13	89	19	413-80025

DEMOUNTABLE SHOULDER BUSHINGS - BRONZE-RITE™ - LAMINA STANDARD™ - METRIC

Diameter	T = Medium Shoulder							
	P	H	J	S	T	L	V	Part No.
19	28	34	31	18	32	50	17	413-19050
25	38	44	41	23	32	55	17	413-25050
32	45	53	50	26	34	60	17	413-32050
40	54	63	60	30	37	67	17	413-40050
50	65	79	76	35	40	75	17	413-50050
63	81	92	89	46	42	88	17	413-63050
80	100	111	108	46	52	98	17	413-80050

DEMOUNTABLE SHOULDER BUSHINGS - BRONZE-RITE™ - LAMINA STANDARD™ - METRIC

Diameter	T = Long Shoulder							
	P	H	J	S	T	L	V	Part No.
19	28	34	31	18	52	70	17	413-19075
25	38	44	41	23	57	80	17	413-25075
32	45	53	50	26	64	90	17	413-32075
40	54	63	60	30	70	100	17	413-40075
50	65	79	76	35	75	110	17	413-50075
63	81	92	89	46	82	128	17	413-63075
80	100	111	108	46	102	148	17	413-80075

PRESS FIT SHOULDER BUSHINGS - STEEL & BRONZE

METRIC

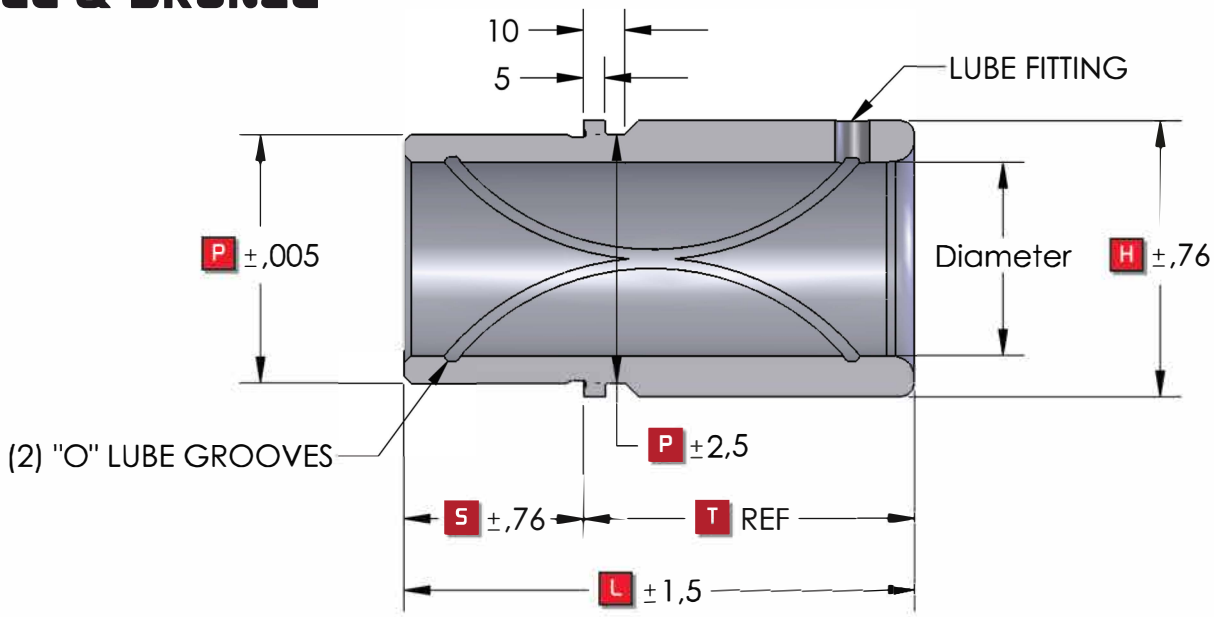

Diameter	P	H
19	28,05	32
25	38,05	43
32	45,05	50
40	54,05	59
44	58,07	65
50	65,07	75
63	81,07	91
80	100,07	110

WHEN ORDERING PLEASE SPECIFY:

1. Part Number
2. Quantity

Hardened to 60 +/- 2 Rc

PRESS FIT SHOULDER BUSHINGS - STEEL and BRONZE - METRIC

Diameter	T = 25				T = 50				T = 75			
	S	L	Steel Part No.	Bronze Part No.	S	L	Steel Part No.	Bronze Part No.	S	L	Steel Part No.	Bronze Part No.
19	18	43	414-19025	416-19025	18	68	414-19050	416-19050	18	93	414-19075	416-19075
25	22	47	414-25025	416-25025	22	72	414-25050	416-25050	22	97	414-25075	416-25075
32	25	50	414-32025	416-32025	25	75	414-32050	416-32050	25	100	414-32075	416-32075
40	35	60	414-40025	416-40025	35	85	414-40050	416-40050	35	110	414-40075	416-40075
44	35	60	414-44025	416-44025	35	85	414-44050	416-44050	35	110	414-44075	416-44075
50	45	70	414-50025	416-50025	45	95	414-50050	416-50050	45	120	414-50075	416-50075
63	45	70	414-63025	416-63025	45	95	414-63050	416-63050	45	120	414-63075	416-63075
80	45	70	414-80025	416-80025	45	95	414-80050	416-80050	45	120	414-80075	416-80075

PRESS FIT STRAIGHT SLEEVE BUSHINGS - STEEL & BRONZE

METRIC

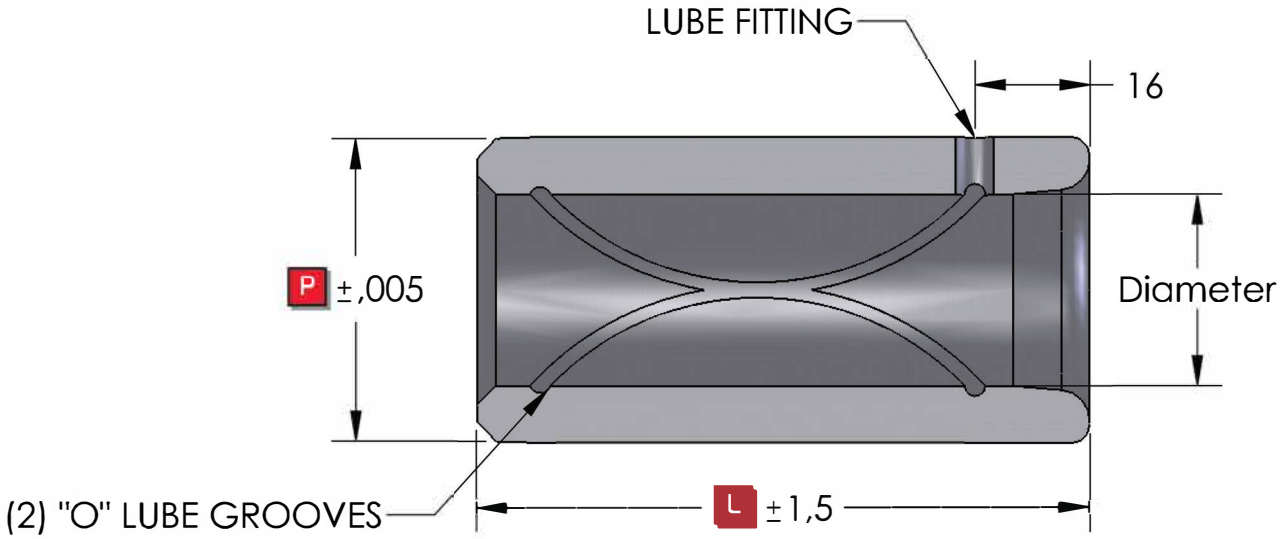

Diameter	P
19	28,05
25	38,05
32	45,05
40	54,05
44	58,07
50	65,07
63	81,07
80	100,07

WHEN ORDERING PLEASE SPECIFY:

1. Part Number
2. Quantity

Hardened to 60 +/- 2 Rc

PRESS FIT SHOULDER BUSHINGS - STEEL and BRONZE - METRIC

Diameter	L = 50		L = 65		L = 75	
	Steel Part No.	Bronze Part No.	Steel Part No.	Bronze Part No.	Steel Part No.	Bronze Part No.
19	415-19050	417-19050	415-19065	417-19065	415-19075	417-19075
25	415-25050	417-25050	415-25065	417-25065	415-25075	417-25075
32	415-32050	417-32050	415-32065	417-32065	415-32075	417-32075
40	415-40050	417-40050	415-40065	417-40065	415-40075	417-40075
44	415-44050	417-44050	415-44065	417-44065	415-44075	417-44075
50	415-50050	417-50050	415-50065	417-50065	415-50075	417-50075
63	415-63050	417-63050	415-63065	417-63065	415-63075	417-63075
80	415-80050	417-80050	415-80065	417-80065	415-80075	417-80075

PRESS FIT STRAIGHT GUIDE PINS

METRIC

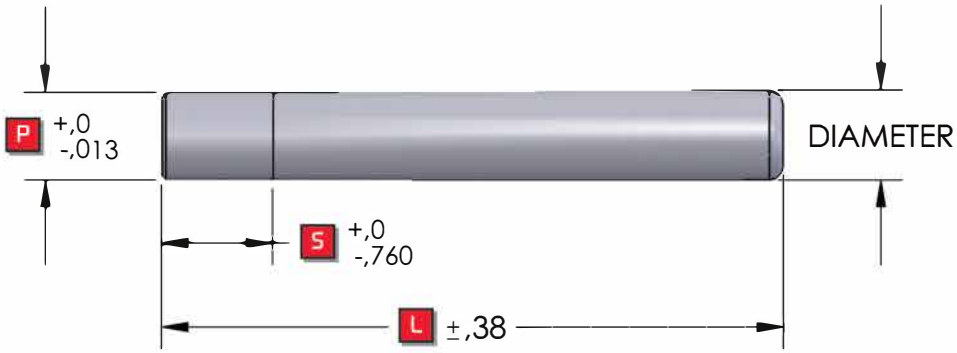

Diameter	P	S
19	19,05	32
25	25,05	32
32	32,05	40
40	40,05	50
44	44,07	50
50	50,07	63
63	63,07	80
80	80,07	90

WHEN ORDERING PLEASE SPECIFY:

1. Part Number
2. Quantity

Hardened to 60 +/- 2 Rc

PRESS FIT STRAIGHT GUIDE PIN - METRIC

L	Dia = 19 Part No.	Dia = 25 Part No.	Dia = 32 Part No.	Dia = 40 Part No.	Dia = 44 Part No.	Dia = 50 Part No.	Dia = 63 Part No.	Dia = 80 Part No.
90	421-19090							
100	421-19100							
110	421-19110	421-25110						
120	421-19120	421-25120						
130	421-19130	421-25130	421-32130	421-40130				
140	421-19140	421-25140	421-32140	421-40140				
150	421-19150	421-25150	421-32150	421-40150	421-44150	421-50150		
160	421-19160	421-25160	421-32160	421-40160	421-44160	421-50160		
170	421-19170	421-25170	421-32170	421-40170	421-44170	421-50170		
180	421-19180	421-25180	421-32180	421-40180	421-44180	421-50180		
190	421-19190	421-25190	421-32190	421-40190	421-44190	421-50190		
200	421-19200	421-25200	421-32200	421-40200	421-44200	421-50200	421-63200	421-80200
220		421-25220	421-32220	421-40220	421-44220	421-50220	421-63220	421-80220
240		421-25240	421-32240	421-40240	421-44240	421-50240	421-63240	421-80240
260		421-25260	421-32260	421-40260	421-44260	421-50260	421-63260	421-80260
280		421-25280	421-32280	421-40280	421-44280	421-50280	421-63280	421-80280
300			421-32300	421-40300	421-44300	421-50300	421-63300	421-80300
320			421-32320	421-40320	421-44320	421-50320	421-63320	421-80320
360				421-40360	421-44360	421-50360	421-63360	421-80360
400						421-50400	421-63400	421-80400
440						421-50440	421-63440	421-80440
500							421-63500	421-80500

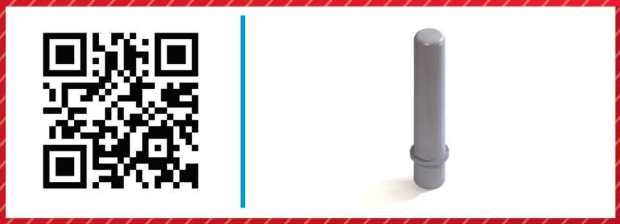

DEMOUNTABLE GUIDE PINS — METRIC

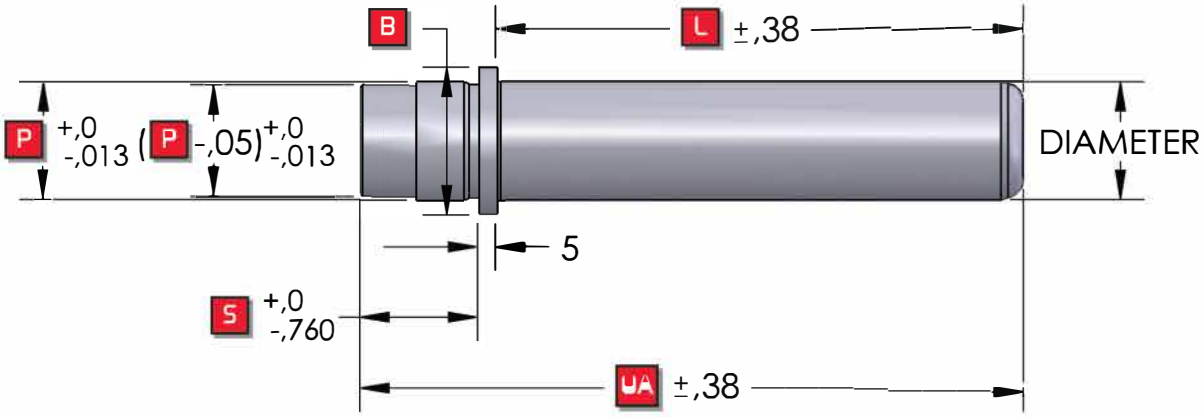

Diameter	P	B	S
19	19,05	25	19
25	25,05	32	25
32	32,05	40	32
40	40,05	48	40
44	44,07	57	44
50	50,07	63	50
63	63,07	79	63
80	80,07	93	80

WHEN ORDERING PLEASE SPECIFY:

1. Part Number
2. Quantity

"L" Hardened to 60 +/- 2 Rc

DEMOUNTABLE GUIDE PINS - METRIC

L	Dia = 19		Dia = 25		Dia = 32		Dia = 40		Dia = 44		Dia = 50		Dia = 63		Dia = 80	
	OA	Part No.	OA	Part No.	OA	Part No.	OA	Part No.	OA	Part No.	OA	Part No.	OA	Part No.	OA	Part No.
60	79	422-19060														
70	89	422-19070														
80	99	422-19080	105	422-25080												
90	109	422-19090	115	422-25090												
100	119	422-19100	25	422-25100	132	422-32100	140	422-40100	144	422-44100	150	422-50100				
110	129	422-19110	135	422-25110	142	422-32110	150	422-40110	154	422-44110	160	422-50110				
120	139	422-19120	145	422-25120	152	422-32120	160	422-40120	164	422-44120	170	422-50120				
130	149	422-19130	155	422-25130	162	422-32130	170	422-40130	174	422-44130	180	422-50130				
140	159	422-19140	165	422-25140	172	422-32140	180	422-40140	184	422-44140	190	422-50140				
150	169	422-19150	175	422-25150	182	422-32150	190	422-40150	194	422-44150	200	422-50150	213	422-63150	230	422-80150
160	179	422-19160	185	422-25160	192	422-32160	200	422-40160	204	422-44160	210	422-50160	223	422-63160	240	422-80160
170	189	422-19170	195	422-25170	202	422-32170	210	422-40170	214	422-44170	220	422-50170	233	422-63170	250	422-80170
180					212	422-32180	220	422-40180	224	422-44180	230	422-50180	243	422-63180	260	422-80180
190					222	422-32190	230	422-40190	234	422-44190	240	422-50190	253	422-63190	270	422-80190
200					232	422-32200	240	422-40200	244	422-44200	250	422-50200	263	422-63200	280	422-80200
220					252	422-32220	260	422-40220	264	422-44220	270	422-50220	283	422-63220	300	422-80220
240					272	422-32240	280	422-40240	284	422-44240	290	422-50240	303	422-63240	320	422-80240
260					292	422-32260	300	422-40260	304	422-44260	310	422-50260	323	422-63260	340	422-80260
280					312	422-32280	320	422-40280	324	422-44280	330	422-50280	343	422-63280	360	422-80280
300							340	422-40300	344	422-44300	350	422-50300	363	422-63300	380	422-80300
320							360	422-40320	364	422-44320	370	422-50320	383	422-63320	400	422-80320
360											410	422-50360	423	422-63360	440	422-80360
400											450	422-50400	463	422-63400	480	422-80400
440													503	422-63440	520	422-80440

SHOULDER GUIDE PINS

METRIC

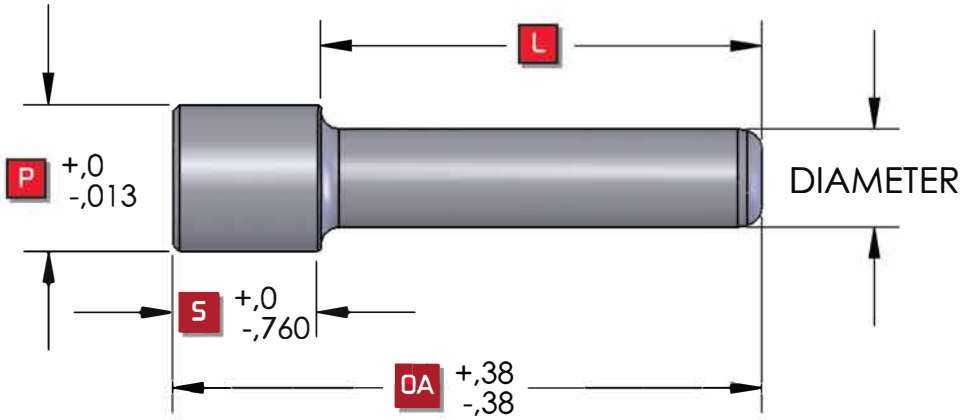

Diameter	P	S
19	28,30	25
25	38,30	25
32	45,30	45
40	54,30	50
44	58,30	60
50	65,30	90
63	81,30	100
80	100,30	100

WHEN ORDERING PLEASE SPECIFY:

1. Part Number
2. Quantity

Hardened to 60 +/- 2 Rc

SHOULDER GUIDE PINS - METRIC

OA	Dia = 19		Dia = 25		Dia = 32		Dia = 40		Dia = 44		Dia = 50		Dia = 63		Dia = 80	
	L	Part No.	L	Part No.	L	Part No.	L	Part No.	L	Part No.	L	Part No.	L	Part No.	L	Part No.
75	50	423-19075	50	423-25075												
90	65	423-19090	65	423-25090												
100	75	423-19100	75	423-25100												
110	85	423-19110	85	423-25110	65	423-32110	60	423-40110								
120	95	423-19120	95	423-25120	75	423-32120	70	423-40120	60	423-44120						
130	105	423-19130	105	423-25130	85	423-32130	80	423-40130	70	423-44130	40	423-50130				
140	115	423-19140	115	423-25140	95	423-32140	90	423-40140	80	423-44140	50	423-50140				
150	125	423-19150	125	423-25150	105	423-32150	100	423-40150	90	423-44150	60	423-50150				
160			135	423-25160	115	423-32160	110	423-40160	100	423-44160	70	423-50160				
170			145	423-25170	125	423-32170	120	423-40170	110	423-44170	80	423-50170				
180			155	423-25180	135	423-32180	130	423-40180	120	423-44180	90	423-50180				
190			165	423-25190	145	423-32190	140	423-40190	130	423-44190	100	423-50190				
200			175	423-25200	155	423-32200	150	423-40200	140	423-44200	110	423-50200	100	423-63200	100	423-80200
220			195	423-25220	175	423-32220	170	423-40220	160	423-44220	130	423-50220	120	423-63220	120	423-80220
240			215	423-25240	195	423-32240	190	423-40240	180	423-44240	150	423-50240	140	423-63240	140	423-80240
260			235	423-25260	215	423-32260	210	423-40260	200	423-44260	170	423-50260	160	423-63260	160	423-80260
280					235	423-32280	230	423-40280	220	423-44280	190	423-50280	180	423-63280	180	423-80280
300					255	423-32300	250	423-40300	240	423-44300	210	423-50300	200	423-63300	200	423-80300
320					275	423-32320	270	423-40320	260	423-44320	230	423-50320	220	423-63320	220	423-80320
360							310	423-40360	300	423-44360	270	423-50360	260	423-63360	260	423-80360
400											310	423-50400	300	423-63400	300	423-80400
440											350	423-50440	340	423-63440	340	423-80440
500													400	423-63500	400	423-80500

BALL BEARING GUIDE PINS - TYPE A

METRIC

CAGE END

PUNCH HOLDER OR "PLATE" END

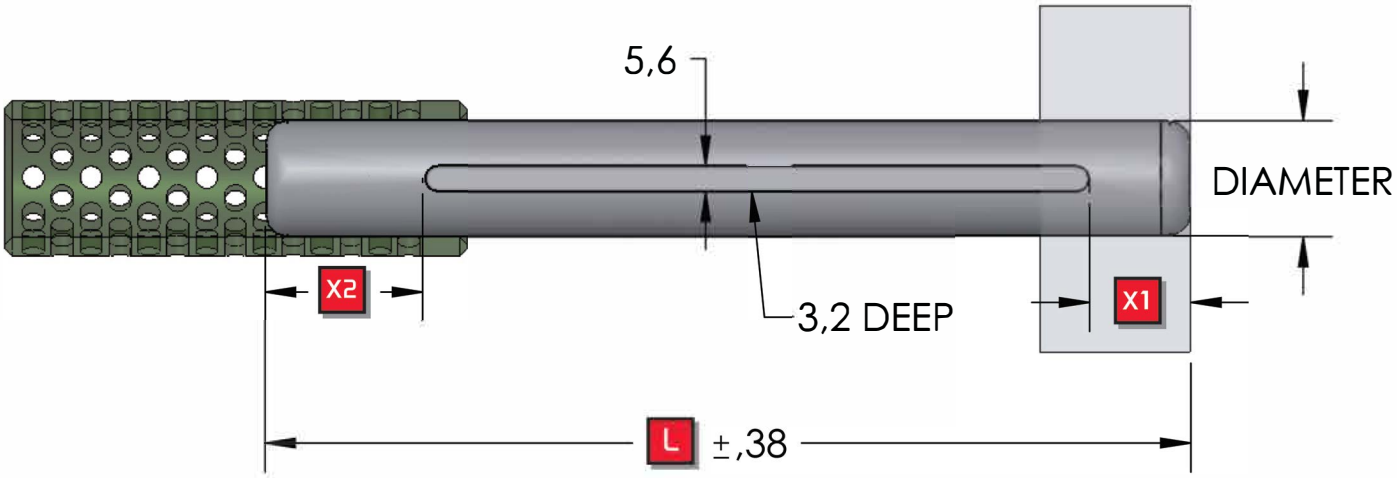

Diameter	X1	X2
19	22	35
25	22	35
32	22	35
40	28	41
44	35	48
50	41	51
63	63	86
80	63	86

WHEN ORDERING PLEASE SPECIFY:

1. Part Number
2. Quantity

Hardened to 60 +/- 2 Rc

BALL BEARING GUIDE PINS - TYPE A METRIC

BALL BEARING GUIDE PINS - TYPE A - METRIC

L	Dia = 19	Dia = 25	Dia = 32	Dia = 40	Dia = 44	Dia = 50	Dia = 63	Dia = 80
	Part No.	Part No.	Part No.	Part No.	Part No.	Part No.	Part No.	Part No.
75	431-19075							
90	431-19090	431-25090						
110	431-19110	431-25110	431-32110	431-40110				
120	431-19120	431-25120	431-32120	431-40120	431-44120			
130	431-19130	431-25130	431-32130	431-40130	431-44130	431-50130		
140	431-19140	431-25140	431-32140	431-40140	431-44140	431-50140		
150	431-19150	431-25150	431-32150	431-40150	431-44150	431-50150		
160	431-19160	431-25160	431-32160	431-40160	431-44160	431-50160		
170		431-25170	431-32170	431-40170	431-44170	431-50170		
180		431-25180	431-32180	431-40180	431-44180	431-50180		
190		431-25190	431-32190	431-40190	431-44190	431-50190		
200		431-25200	431-32200	431-40200	431-44200	431-50200	431-63200	431-80200
220		431-25220	431-32220	431-40220	431-44220	431-50220	431-63220	431-80220
240		431-25240	431-32240	431-40240	431-44240	431-50240	431-63240	431-80240
260		431-25260	431-32260	431-40260	431-44260	431-50260	431-63260	431-80260
280		431-25280	431-32280	431-40280	431-44280	431-50280	431-63280	431-80280
300			431-32300	431-40300	431-44300	431-50300	431-63300	431-80300
320			431-32320	431-40320	431-44320	431-50320	431-63320	431-80320
360				431-40360	431-44360	431-50360	431-63360	431-80360
400						431-50400	431-63400	431-80400
440						431-50440	431-63440	431-80440
500							431-63500	431-80500

BALL BEARING GUIDE PINS - MAXICAGE™ METRIC

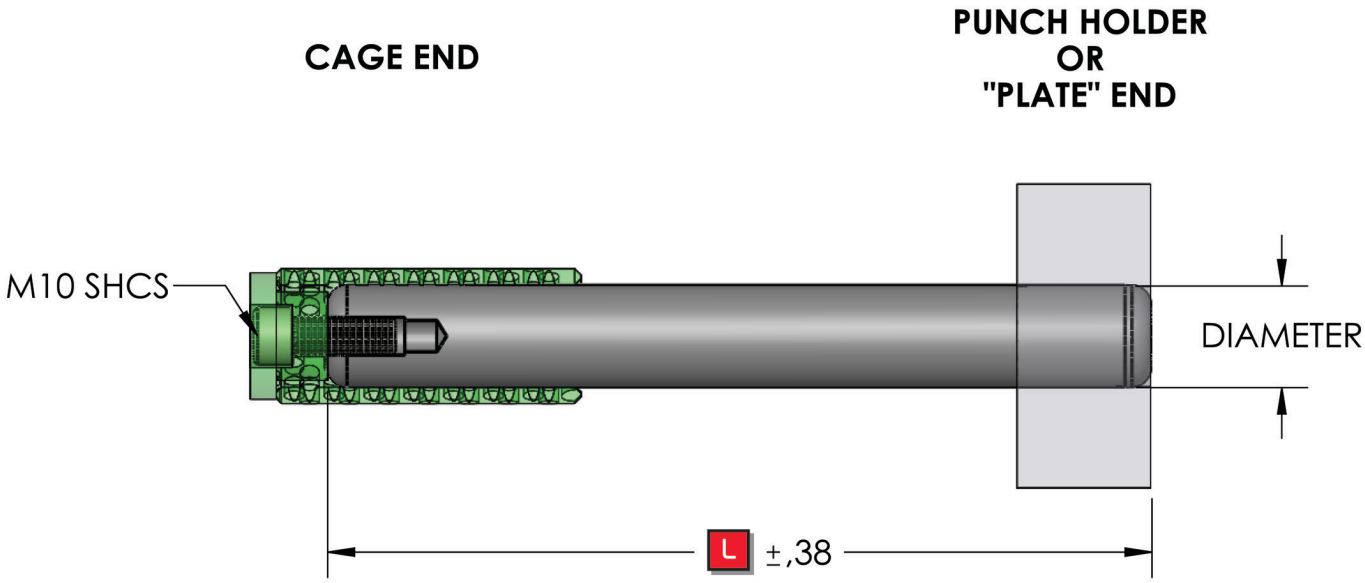

WHEN ORDERING PLEASE SPECIFY:

1. Part Number
2. Quantity
3. MaxiCage End Cap Sold Separately
   See page 1130

Hardened to 60 +/- 2 Rc

BALL BEARING GUIDE PINS - MAXICAGE™ METRIC

BALL BEARING GUIDE PINS - MAXICAGE - METRIC

L	D = 19	D = 25	D = 32	D = 40	D = 44	D = 50	D = 63	D = 80
	Part No.	Part No.	Part No.	Part No.	Part No.	Part No.	Part No.	Part No.
75	431M19075							
90	431M19090	431M25090						
110	431M19110	431M25110	431M32110	431M40110				
120	431M19120	431M25120	431M32120	431M40120	431M44120			
130	431M19130	431M25130	431M32130	431M40130	431M44130	431M50130		
140	431M19140	431M25140	431M32140	431M40140	431M44140	431M50140		
150	431M19150	431M25150	431M32150	431M40150	431M44150	431M50150		
160	431M19160	431M25160	431M32160	431M40160	431M44160	431M50160		
170		431M25170	431M32170	431M40170	431M44170	431M50170		
180		431M25180	431M32180	431M40180	431M44180	431M50180		
190		431M25190	431M32190	431M40190	431M44190	431M50190		
200		431M25200	431M32200	431M40200	431M44200	431M50200	431M63200	431M80200
220		431M25220	431M32220	431M40220	431M44220	431M50220	431M63220	431M80220
240		431M25240	431M32240	431M40240	431M44240	431M50240	431M63240	431M80240
260		431M25260	431M32260	431M40260	431M44260	431M50260	431M63260	431M80260
280		431M25280	431M32280	431M40280	431M44280	431M50280	431M63280	431M80280
300			431M32300	431M40300	431M44300	431M50300	431M63300	431M80300
320			431M32320	431M40320	431M44320	431M50320	431M63320	431M80320
360				431M40360	431M44360	431M50360	431M63360	431M80360
400						431M50400	431M63400	431M80400
440						431M50440	431M63440	431M80440
500							431M63500	431M80500

DEMOUNTABLE BALL BEARING GUIDE PIN - TYPE A

METRIC

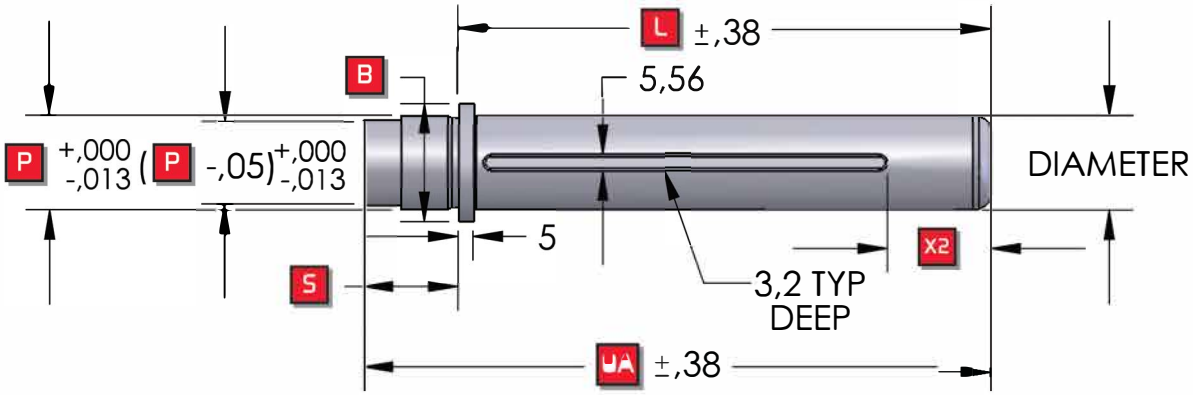

Diameter	P	B	S	X2
19	19,05	25	19	35
25	25,05	32	25	35
32	32,05	40	32	35
40	40,05	48	40	41
44	44,07	57	44	48
50	50,07	63	50	51
63	63,07	79	63	86
80	80,07	93	80	86

WHEN ORDERING PLEASE SPECIFY:

1. Part Number
2. Quantity

"L" Hardened to 60 +/- 2 Rc

DEMOUNTABLE BALL BEARING GUIDE PIN - TYPE A - METRIC

L	Dia = 19		Dia = 25		Dia = 32		Dia = 40		Dia = 44		Dia = 50		Dia = 63		Dia = 80	
	OA	Part No.	OA	Part No.	OA	Part No.	OA	Part No.	OA	Part No.	OA	Part No.	OA	Part No.	OA	Part No.
60	79	432-19060														
70	89	432-19070														
80	899	432-19080	105	432-25080												
90	109	432-19090	115	432-25090												
100	119	432-19100	125	432-25100	132	432-32100	140	432-40100	144	432-44100	150	432-50100				
110	129	432-19110	135	432-25110	142	432-32110	150	432-40110	154	432-44110	160	432-50110				
120	139	432-19120	145	432-25120	152	432-32120	160	432-40120	164	432-44120	170	432-50120				
130	149	432-19130	155	432-25130	162	432-32130	170	432-40130	174	432-44130	180	432-50130				
140	159	432-19140	165	432-25140	172	432-32140	180	432-40140	184	432-44140	190	432-50140				
150	169	432-19150	175	432-25150	182	432-32150	190	432-40150	194	432-44150	200	432-50150	213	432-63150	230	432-80150
160	179	432-19160	185	432-25160	192	432-32160	200	432-40160	204	432-44160	210	432-50160	223	432-63160	240	432-80160
170	189	432-19170	195	432-25170	202	432-32170	210	432-40170	214	432-44170	220	432-50170	233	432-63170	250	432-80170
180					212	432-32180	220	432-40180	224	432-44180	230	432-50180	243	432-63180	260	432-80180
190					222	432-32190	230	432-40190	234	432-44190	240	432-50190	253	432-63190	270	432-80190
200					232	432-32200	240	432-40200	244	432-44200	250	432-50200	263	432-63200	280	432-80200
220					252	432-32220	260	432-40220	264	432-44220	270	432-50220	283	432-63220	300	432-80220
240					272	432-32240	280	432-40240	284	432-44240	290	432-50240	303	432-63240	320	432-80240
260					292	432-32260	300	432-40260	304	432-44260	310	432-50260	323	432-63260	340	432-80260
280					312	432-32280	320	432-40280	324	432-44280	330	432-50280	343	432-63280	260	432-80280
300							340	432-40300	344	432-44300	350	432-50300	363	432-63300	380	432-80300
320							360	432-40320	364	432-44320	370	432-50320	383	432-63320	400	432-80320
360											410	432-50360	423	432-63360	440	432-80360
400											450	432-50400	463	432-63400	480	432-80400
440													503	432-63440	520	432-80440

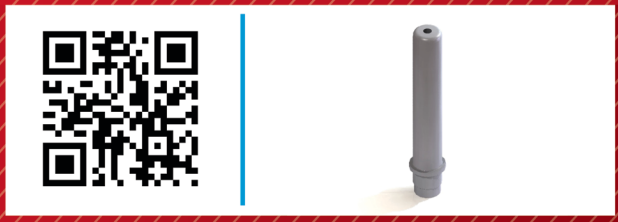

DEMOUNTABLE BALL BEARING GUIDE PIN - MAXICAGE™

METRIC

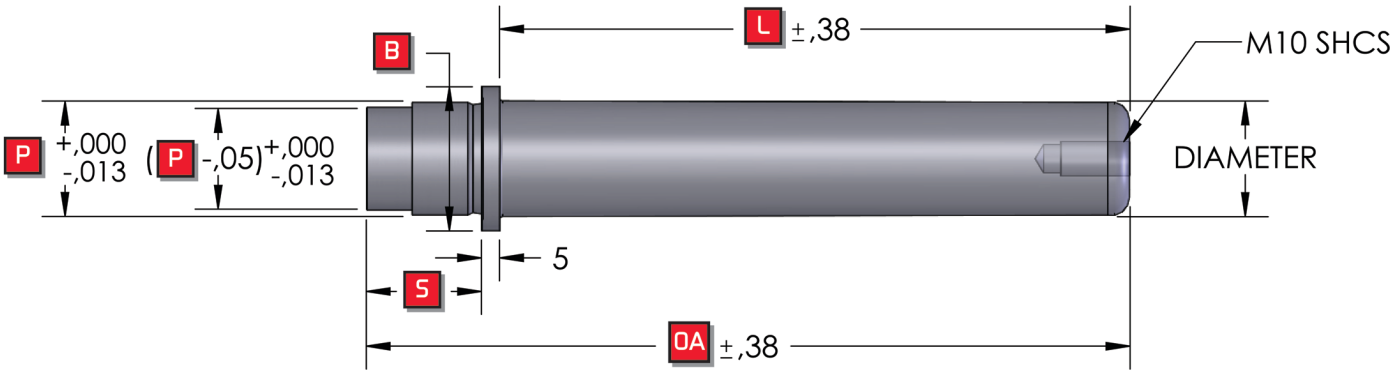

Diameter	P	B	S
19	19	25	19
25	25	32	25
32	32	40	32
40	40	48	40
44	44	57	44
50	50	63	50
63	63	79	63
80	80	93	80

WHEN ORDERING PLEASE SPECIFY:

1. Part Number
2. Quantity
3. MaxiCage End Cap Sold Separately
   See page 1130

"L" Hardened to 60 +/- 2 Rc

DEMOUNTABLE BALL BEARING GUIDE PIN - MAXI-CAGE - METRIC

L	Dia = 19		Dia = 25		Dia = 32		Dia = 40		Dia = 44		Dia = 50		Dia = 63		Dia = 80	
	OA	Part No.	OA	Part No.	OA	Part No.	OA	Part No.	OA	Part No.	OA	Part No.	OA	Part No.	OA	Part No.
60	79	432M19060														
70	89	432M19070														
80	899	432M19080	105	432M25080												
90	109	432M19090	115	432M25090												
100	119	432M19100	125	432M25100	132	432M32100	140	432M40100	144	432M44100	150	432M50100				
110	129	432M19110	135	432M25110	142	432M32110	150	432M40110	154	432M44110	160	432M50110				
120	139	432M19120	145	432M25120	152	432M32120	160	432M40120	164	432M44120	170	432M50120				
130	149	432M19130	155	432M25130	162	432M32130	170	432M40130	174	432M44130	180	432M50130				
140	159	432M19140	165	432M25140	172	432M32140	180	432M40140	184	432M44140	190	432M50140				
150	169	432M19150	175	432M25150	182	432M32150	190	432M40150	194	432M44150	200	432M50150	213	432M63150	230	432M80150
160	179	432M19160	185	432M25160	192	432M32160	200	432M40160	204	432M44160	210	432M50160	223	432M63160	240	432M80160
170	189	432M19170	195	432M25170	202	432M32170	210	432M40170	214	432M44170	220	432M50170	233	432M63170	250	432M80170
180					212	432M32180	220	432M40180	224	432M44180	230	432M50180	243	432M63180	260	432M80180
190					222	432M32190	230	432M40190	234	432M44190	240	432M50190	253	432M63190	270	432M80190
200					232	432M32200	240	432M40200	244	432M44200	250	432M50200	263	432M63200	280	432M80200
220					252	432M32220	260	432M40220	264	432M44220	270	432M50220	283	432M63220	300	432M80220
240					272	432M32240	280	432M40240	284	432M44240	290	432M50240	303	432M63240	320	432M80240
260					292	432M32260	300	432M40260	304	432M44260	310	432M50260	323	432M63260	340	432M80260
280					312	432M32280	320	432M40280	324	432M44280	330	432M50280	343	432M63280	260	432M80280
300							340	432M40300	344	432M44300	350	432M50300	363	432M63300	380	432M80300
320							360	432M40320	364	432M44320	370	432M50320	383	432M63320	400	432M80320
360											410	432M50360	423	432M63360	440	432M80360
400											450	432M50400	463	432M63400	480	432M80400
440													503	432M63440	520	432M80440

BALL BEARING CAGES - TYPE A

METRIC

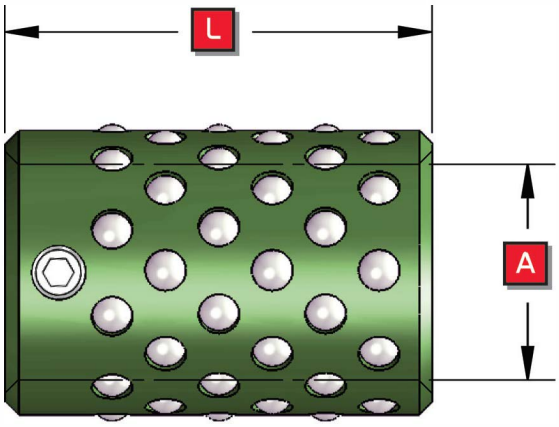

WHEN ORDERING PLEASE SPECIFY:

1. Part Number
2. Quantity

Note:

1. 5mm ball dia. Pin dia. 19mm ≤ 44mm
2. 7mm ball dia. Pin dia. ≥ 50mm
3. Two dog point set screws used on cages ≥ 50mm dia.

TYPE A BALL BEARING CAGES - METRIC

Diameter	A	L	Ball Dia	Part No.
19	19,3	40	5	435-19040
19	19,3	50	5	435-19050
19	19,3	65	5	435-19065
25	25,3	40	5	435-25040
25	25,3	50	5	435-25050
25	25,3	65	5	435-25065
32	32,3	60	5	435-32060
32	32,3	70	5	435-32070
32	32,3	75	5	435-32075
32	32,3	80	5	435-32080
32	32,3	85	5	435-32085
40	40,3	65	5	435-40065
40	40,3	75	5	435-40075
40	40,3	90	5	435-40090
40	40,3	95	5	435-40095

TYPE A BALL BEARING CAGES - METRIC

Diameter	A	L	Ball Dia	Part No.
44	44,3	70	7	435-44070
44	44,3	75	7	435-44075
44	44,3	85	7	435-44085
44	44,3	90	7	435-44090
44	44,3	100	7	435-44100
44	44,3	110	7	435-44110
50	50,3	85	7	435-50085
50	50,3	90	7	435-50090
50	50,3	100	7	435-50100
50	50,3	115	7	435-50115
63	63,3	100	7	435-63100
63	63,3	125	7	435-63125
63	63,3	150	7	435-63150
63	63,3	175	7	435-63175
80	80,3	125	7	435-80125
80	80,3	150	7	435-80150
80	80,3	175	7	435-80175

BALL BEARING DEMOUNTABLE SHOULDER BUSHINGS

METRIC

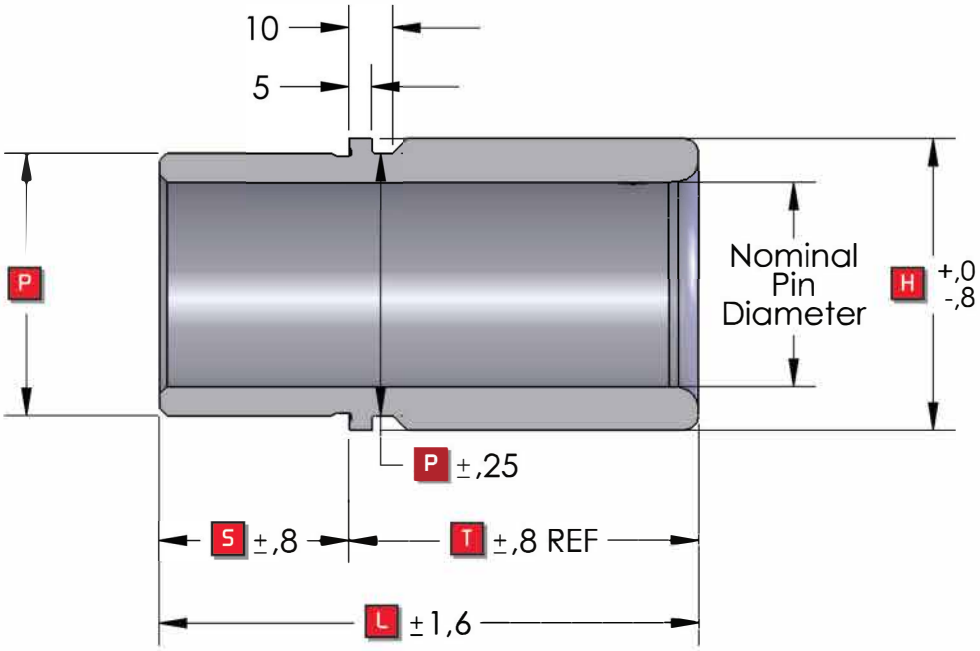

Diameter	P	S	H
19	36	30	45
25	44	30	51
32	54	30	61
40	65	35	72
44	74	35	81
50	81	35	91
63	95	35	105
80	112	35	122

WHEN ORDERING PLEASE SPECIFY:

1. Part Number
2. Quantity

Hardened to 60 +/- 2 Rc

BALL BEARING DEMOUNTABLE SHOULDER BUSHINGS - METRIC

Diameter	T = 25		T = 50		T = 75		T = 100		T = 125		T = 150	
	L	Part No.	L	Part No.	L	Part No.	L	Part No.	L	Part No.	L	Part No.
19	55	436-19025	80	436-19050	105	436-19075						
25	55	436-25025	80	436-25050	105	436-25075						
32	55	436-32025	80	436-32050	105	436-32075	130	436-32100	155	436-32125		
40			85	436-40050	110	436-40075	135	436-40100	160	436-40125		
44			85	436-44050	110	436-44075	135	436-44100	160	436-44125	185	436-44150
50			85	436-50050	110	436-50075	135	436-50100	160	436-50125	185	436-50150
63					110	436-63075	135	436-63100	160	436-63125	185	436-63150
80					110	436-80075	135	436-80100	160	436-80125	185	436-80150

BALL BEARING PRESS FIT STRAIGHT BUSHINGS

METRIC

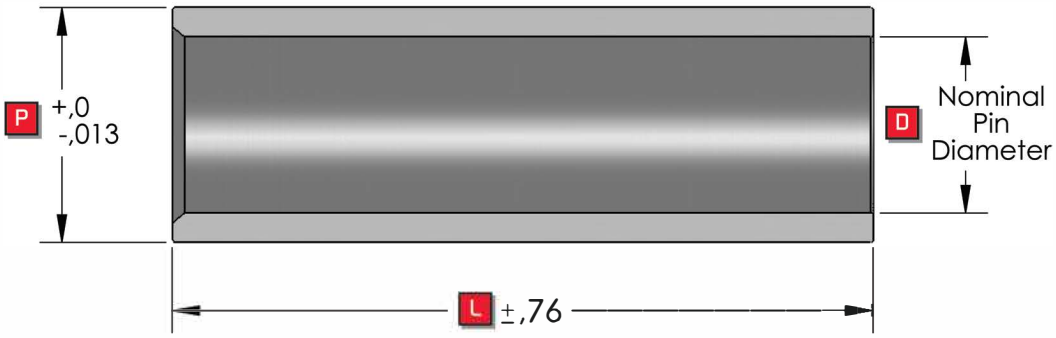

Diameter	P
19	36,05
25	44,05
32	54,05
40	65,05
44	74,05
50	81,05
63	95,05
80	112,05

WHEN ORDERING PLEASE SPECIFY:

1. Part Number
2. Quantity

Hardened to 60 +/- 2 Rc

BALL BEARING PRESS FIT STRAIGHT BUSHINGS - METRIC

L	D = 19 Part No.	D = 25 Part No.	D = 32 Part No.	D = 40 Part No.	D = 44 Part No.	D = 50 Part No.	D = 63 Part No.	D = 80 Part No.
050	437-19050							
065	437-19065	437-25065						
075	437-19075	437-25075	437-32075	437-40075				
090	437-19090	437-25090	437-32090	437-40090				
100	437-19100	437-25100	437-32100	437-40100				
115	437-19115	437-25115	437-32115	437-40115				
125	437-19125	437-25125	437-32125	437-40125	437-44125	437-50125		
140	437-19140	437-25140	437-32140	437-40140	437-44140	437-50140	437-63140	437-80140
150	437-19150	437-25150	437-32150	437-40150	437-44150	437-50150	437-63150	437-80150
165		437-25165	437-32165	437-40165	437-44165	437-50165	437-63165	437-80165
175		437-25175	437-32175	437-40175	437-44175	437-50175	437-63175	437-80175
190				437-40190	437-44190	437-50190	437-63190	437-80190
200				437-40200	437-44200	437-50200	437-63200	437-80200
215				437-40215	437-44215	437-50215	437-63215	437-80215
230				437-40230	437-44230	437-50230	437-63230	437-80230
250				437-40250	437-44250	437-50250	437-63250	437-80250
280				437-40280	437-44280	437-50280	437-63280	437-80280
300				437-40300	437-44300	437-50300	437-63300	437-80300
330					437-44330	437-50330	437-63330	437-80330
350						437-50350	437-63350	437-80350
500								437-80500

SHANKS

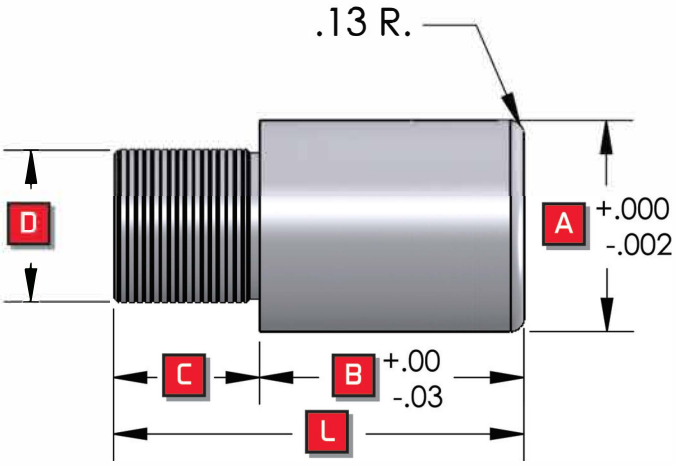

DEMOUNTABLE

WELDED

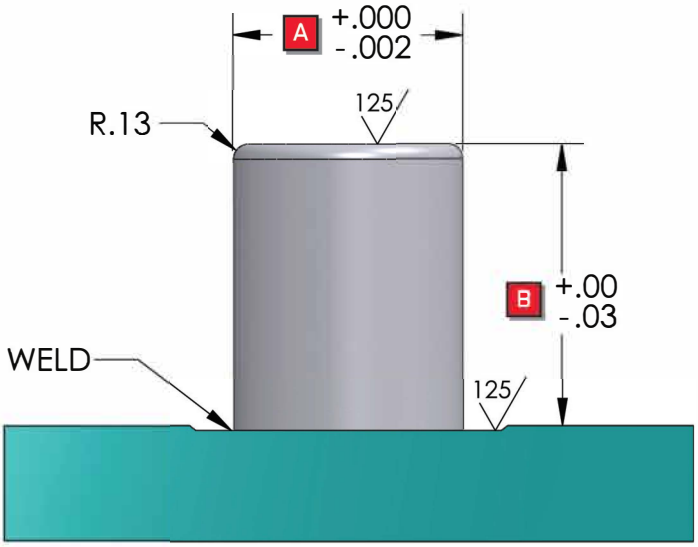

DIE SET SHANKS							
DIAMETER	A	B	Welded Part No.	C	L	D	Demountable Part No.
1	1.000	1.50	390-1624	0.88	2.38	3/4"-14	392-1624
1 1/2	1.500	2.12	390-2434	0.88	3.00	3/4"-14	392-2434
1 9/16	1.562	2.12	390-2534	0.88	3.00	3/4"-14	392-2534
2	2.000	2.50	390-3240	0.88	3.38	3/4"-14	392-3240
2	2.000	2.88	390-3246	0.88	3.75	3/4"-14	392-3246
2 1/2	2.500	2.50	390-4040	1.38	3.88	1 1/4"-12	392-4040
2 1/2	2.500	2.88	390-4046	1.38	4.25	1 1/4"-12	392-4046
3	3.000	2.88	390-4846	1.38	4.25	1 1/4"-12	392-4846

NOTE: Special Sizes available upon request

Shanks are available on all die sets in either welded or removable styles.
Both are located in the center of the die set work area unless otherwise noted.
All shanks should be used strictly for positioning purposes only - not for clamping.

Welded shanks feature a deep penetration circumference weld into the plate surface.

Demountable shanks can be taken off the plate for easier machining
or die maintenance. Demountable shanks are considered 'standard' and provided unless otherwise specified.

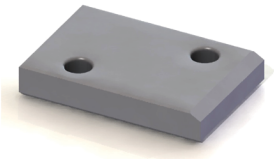

WEAR PLATES - N SERIES

Wear plates are typically fastened to heel block die set styles to help control linear motion during the stamping process. Superior offers two series of standard wear plates: N Series and NAAMS. A complete guide to the 'wear-plate' die set styles can be found in the Superior Die Set Catalog (pages 1230-1250) with 3D CAD models available through our web site.

N SERIES: Wear plates are available in five standard types: hardened steel, steel with self-lubricating graphite plugs, bronze with grease grooves, bronze without grease grooves, and bronze with self-lubricating graphite plugs. Multiple hole patterns are offered for easy mounting and design. These wear plates conform to the automotive 'N' series industry standards in 'inch' sizes. Other types are also available upon request.

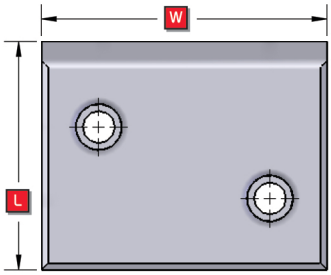

TYPE A

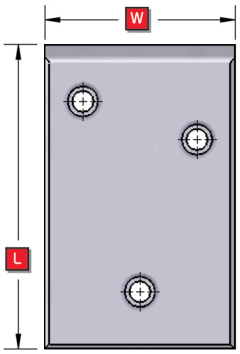

TYPE B

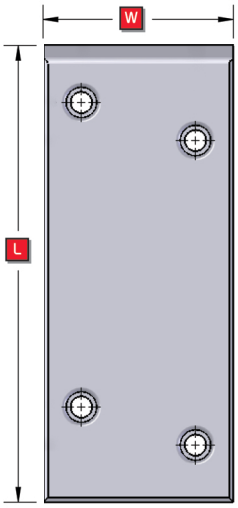

TYPE C

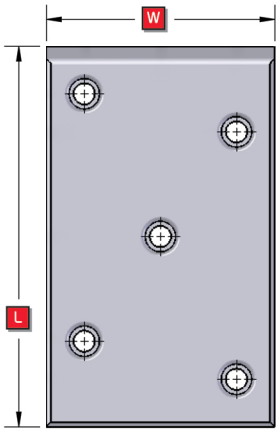

TYPE D

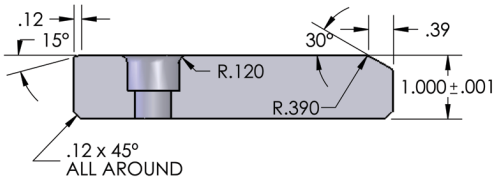

ALL SCREW HOLES 1/2" SHCS
9/16 DRILL THROUGH & 13/16"
COUNTERBORE x .56 DEEP

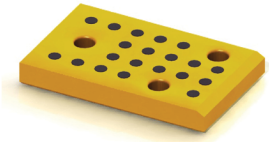

WEAR PLATES - N SERIES

WEAR PLATES - N SERIES

STEEL PLAIN	STEEL WITH GRAPHITE	BRONZE W/ GREASE GROOVES	BRONZE WITH-OUT GREASE GROOVES	BRONZE WITH GRAPHITE	W	L	SCREW HOLES	
							HOLES	TYPE
NSX82508	NSG82508	NY82508X	NYX82508	NYG82508	2.5	8	2	A
NSX83025	NSG83025	NY83025X	NYX83025	NYG83025	3	2.5		
NSX8303	NSG8303	NY8303X	NYX8303	NYG8303		3		
NSX8304	NSG8304	NY8304X	NYX8304	NYG8304		4		
NSX8305	NSG8305	NY8305X	NYX8305	NYG8305		5		
NSX8306	NSG8306	NY8306X	NYX8306	NYG8306		6		
NSX8308	NSG8308	NY8308X	NYX8308	NYG8308		8		
NSX8310	NSG8310	NY8310X	NYX8310	NYG8310		10	3	B
NSX8312	NSG8312	NY8312X	NYX8312	NYG8312		12		
NSX84025	NSG84025	NY84025X	NYX84025	NYG84025	4	2.5	2	A
NSX8403	NSG8403	NY8403X	NYX8403	NYG8403		3		
NSX8404	NSG8404	NY8404X	NYX8404	NYG8404		4		
NSX8405	NSG8405	NY8405X	NYX8405	NYG8405		5		
NSX8406	NSG8406	NY8406X	NYX8406	NYG8406		6		
NSX8408	NSG8408	NY8408X	NYX8408	NYG8408		8	3	B
NSX8410	NSG8410	NY8410X	NYX8410	NYG8410		10		
NSX8412	NSG8412	NY8412X	NYX8412	NYG8412		12		
NSX85025	NSG85025	NY85025X	NYX85025	NYG85025	5	2.5	2	A
NSX8504	NSG8504	NY8504X	NYX8504	NYG8504		4		
NSX8505	NSG8505	NY8505X	NYX8505	NYG8505		5		
NSX8506	NSG8506	NY8506X	NYX8506	NYG8506		6		
NSX8508	NSG8508	NY8508X	NYX8508	NYG8508		8	3	B
NSX8510	NSG8510	NY8510X	NYX8510	NYG8510		10		
NSX8512	NSG8512	NY8512X	NYX8512	NYG8512		12	4	C
NSX86025	NSG86025	NY86025X	NYX86025	NYG86025	6	2.5	2	A
NSX8603	NSG8603	NY8603X	NYX8603	NYG8603		3	3	B
NSX8604	NSG8604	NY8604X	NYX8604	NYG8604		4	3	B
NSX8605	NSG8605	NY8605X	NYX8605	NYG8605		5	2	A
NSX8606	NSG8606	NY8606X	NYX8606	NYG8606		6	4	C
NSX8608	NSG8608	NY8608X	NYX8608	NYG8608		8		
NSX8610	NSG8610	NY8610X	NYX8610	NYG8610		10	5	D
NSX8612	NSG8612	NY8612X	NYX8612	NYG8612		12		
NSX88025	NSG88025	NY88025X	NYX88025	NYG88025	8	2.5	2	A
NSX8805	NSG8805	NY8805X	NYX8805	NYG8805		5		
NSX8806	NSG8806	NY8806X	NYX8806	NYG8806	10	6	4	C
NSX810025	NSG810025	NY810025X	NYX810025	NYG810025		2.5	2	A

WHEN ORDERING PLEASE SPECIFY:

1. Part Number
2. Quantity

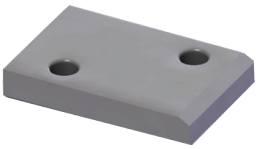

NSX
Steel (Plain)

Hardened to 60 +/- 2 Rc

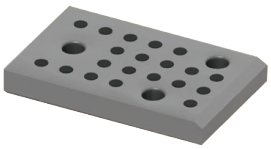

NSG
Steel w/Graphite

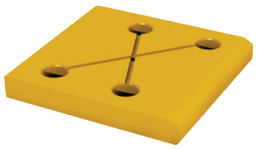

NY____X
Bronze w/Grease Grooves

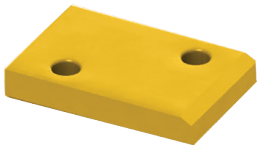

NYX
Bronze without Grease Grooves

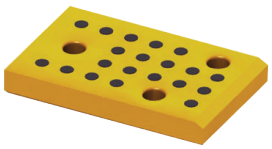

NYG
Bronze w/Graphite

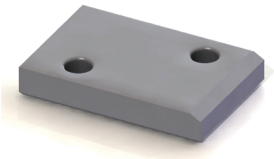

WEAR PLATES - NAAMS

METRIC

NAAMS: Wear plates are available in five standard types: hardened steel, steel with self-lubricating graphite plugs, bronze with grease grooves, bronze without grease grooves, and bronze with self-lubricating graphite plugs. Multiple hole patterns are offered for easy mounting and design. These wear plates conform to the automotive 'NAAMS' series industry standards in 'metric' sizes. Other types are also available upon request.

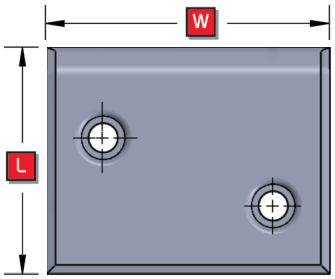

TYPE A

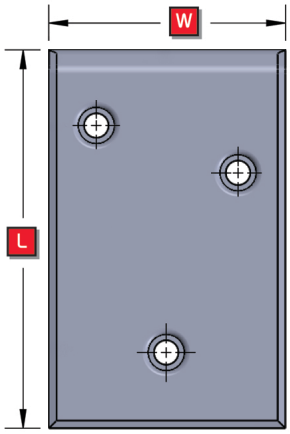

TYPE B

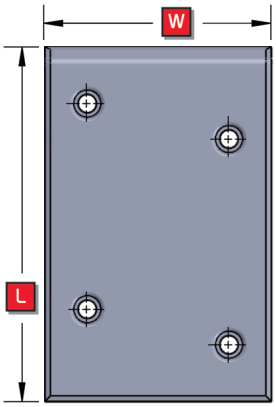

TYPE C

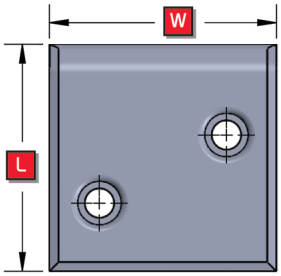

TYPE D

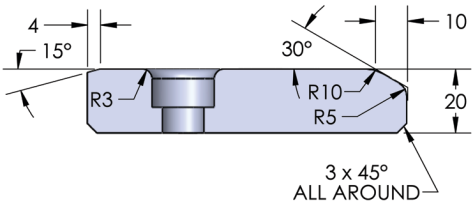

ALL HOLES COUNTERBORED
FOR M12 SHCS

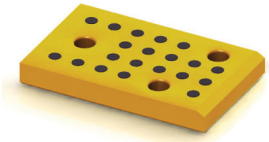

WEAR PLATES - NAAMS

METRIC

WEAR PLATES - NAAMS

STEEL PLAIN	STEEL W/ GRAPHITE	BRONZE W/ GREASE GROVES	BRONZE W/ OUT GREASE GROOVES	BRONZE W/ GRAPHITE	W	L	SCREW HOLES	
							HOLES	TYPE
W025010	W015010	W035010X	W03X5010	W035010	50	100	2	A
W025015	W015015	W035015X	W03X5015	W035015		150		
W025020	W015020	W035020X	W03X5020	W035020		200		
W028010	W018010	W038010X	W03X8010	W038010	80	100	2	A
W028015	W018015	W038015X	W03X8015	W038015		150		
W028020	W018020	W038020X	W03X8020	W038020		200		
W028025	W018025	W038025X	W03X8025	W038025		250		
W028031	W018031	W038031X	W03X8031	W038031		315	3	B
W021050	W011050	W031050X	W03X1050	W031050	100	50	2	D
W021080	W011080	W031080X	W03X1080	W031080		80	2	A
W021010	W011010	W031010X	W03X1010	W031010		100		
W021015	W011015	W031015X	W03X1015	W031015		150	3	B
W021020	W011020	W031020X	W03X1020	W031020		200		
W021025	W011025	W031025X	W03X1025	W031025		250	2	D
W021031	W011031	W031031X	W03X1031	W031031		315		
W021280	W011280	W031280X	W03X1280	W031280	125	80		
W021210	W011210	W031210X	W03X1210	W031210		100	2	A
W021215	W011215	W031215X	W03X1215	W031215		150		
W021220	W011220	W031220X	W03X1220	W031220		200	3	B
W021225	W011225	W031225X	W03X1225	W031225		250		
W021231	W011231	W031231X	W03X1231	W031231		315	4	C
W021610	W011610	W031610X	W03X1610	W031610	160	100	2	A
W021615	W011615	W031615X	W03X1615	W031615		150		
W021620	W011620	W031620X	W03X1620	W031620		200	3	B
W021625	W011625	W031625X	W03X1625	W031625		250	4	C
W021631	W011631	W031631X	W03X1631	W031631		315		

WHEN ORDERING PLEASE SPECIFY:

1. Part Number
2. Quantity

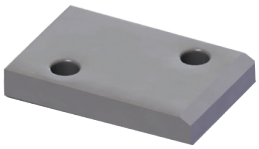

W02
Steel (Plain)

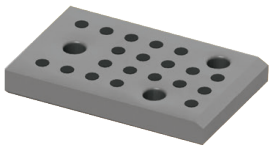

W01
Steel w/Graphite

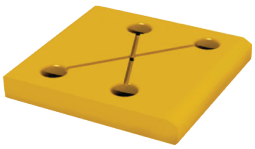

W03____X
Bronze w/Grease Grooves

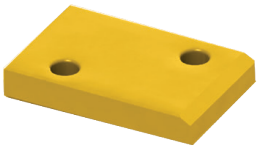

W03X
Bronze without Grease Grooves

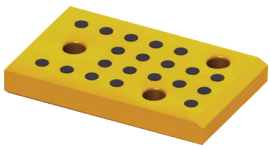

W03
Bronze w/Graphite

Hardened to 60 +/- 2 Rc

GORTITE DIE SET SHIELDS

Gortite® Bellows-Type Die Set Shields extend die set life and increase operator safety even in the highest speed applications. Installed over the guide pins and bushings as shown, they protect these components against damage from abrasive particles, scrap, and scale.

Gortite® shields are manufactured of heavy-duty, oil-resistant, Neoprene-coated nylon. Shields come in standard lengths and diameters complete with back-up mounting plate and clamp. They can be factory installed by Superior or ordered separately and installed by the customer.

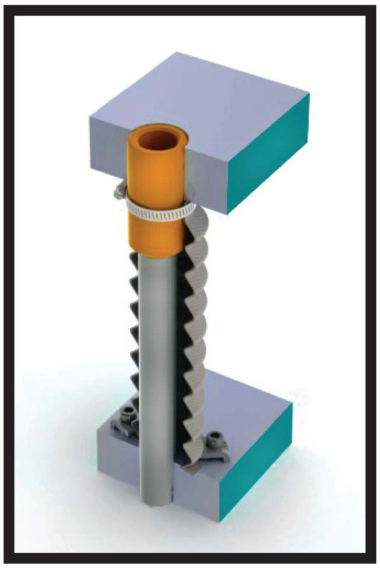

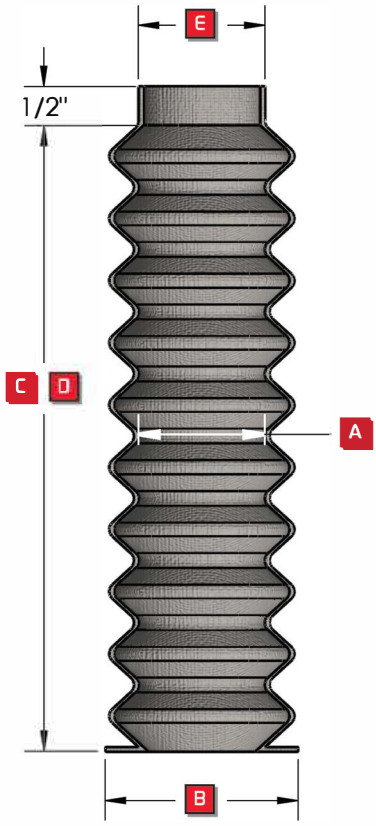

GORTITE® DIE SET SHIELD STYLES

Pin Diameter	Friction Bearing Bushing		Ball Bearing Bushing	
	Shoulder	Sleeve	Shoulder	Sleeve
3/4"	DSA	DSA		DSA
1"	DSB	DSA	DSC	DSB
1 1/4"	DSC	DSB	DSD	DSD
1 1/2"	DSD	DSC	DSE	DSE
1 3/4"	DSE	DSD	DSF	DSE
2"	DSF	DSE	DSG	DSF
2 1/2"	DSG	DSF		DSG

WHEN ORDERING PLEASE SPECIFY:

1. Part Number
2. Quantity

GORTITE® DIE SET SHIELD STYLES

Part No.	A Inside Diameter	B Outside Diameter	C Maximum Length	D Minimum Length	E Collar ID Range
DSA DSA-18	1 1/2"	2 1/2"	11" 18"	1 1/2" 3"	1 3/8 to 1 5/8"
DSB DSB-18	1 3/4"	2 3/4"	11" 18"	1 1/2" 3"	1 5/8 to 1 7/8
DSC DSC-18	2"	3"	11" 18"	1 1/2" 3"	1 7/8 to 2"
DSD DSD-18	2 1/4"	3 1/4"	11" 18"	1 1/2" 3"	2 1/8 to 2 3/8"
DSE DSE-18	2 3/4"	3 3 /4"	11" 18"	1 1/2" 3"	2 1/2 to 2 3/4"
DSF DSF-18	3"	4"	11" 18"	1 1/2" 3"	2 7/8 to 3 1/8"
DSG DSG-18	3 1/2"	4 1/2"	11" 18"	1 1/2" 3"	3 3/8 to 3 5/8"

PRY BARS & LUBRIPLATE™

Superior offers two sizes of pry bars – 20" and 42". Both have a goose neck and chisel point design and have Aluminum Bronze applied to the heel and tip. The 20" model incorporates a waxed finish protective coating for sure handling.

PRY BARS	
SIZE	Part No.
20"	PBR-20
42"	PBR-42

LUBRIPLATE™		
APPLICATION	LUBRIPLATE™ Product	CONTAINER SIZE
Ball Bearing	LMag-00-2	Ctn. 12/2# Plastic Jugs
Ball Bearing	LMag-00-7	Ctn. 4/7# Cans
	L5555-2	Ctn. 12/2# Plastic Jugs
	L5555-7	Ctn. 4/7# Cans
Friction	L130-AA-6	Ctn. 6/6# Cans
Friction	L130-AA-10	Ctn. 36/10 Oz. Plastic Tubes
Friction	L130-AA-14	Ctn. 24/14 Oz. Cans
	L630-AA-6	Ctn. 6/6# Cans
	L630-AA-10	Ctn. 36/10 Oz. Plastic Tubes
	L630-AA-14	Ctn. 24/14 Oz. Cans
Friction	L130-AA-35	5 Gal. Pail
Friction	L630-AA-35	5 Gal. Pail
Friction	L630-AA-55	55 Gal. Drum

Superior is a distributor for Lubriplate products.
We have the above products available from stock and can service your requirements in any other size containers.

900 West Drexel Avenue
Oak Creek, WI 53154

(800) 558-6040
FAX (800) 657-0855

www.superiordieset.com
messages@superiordieset.com

copyright©2019 Superior Die Set Corp.
Form-V1.4-DSC-0819