SUPERIOR COMPONENTS®

TYPE D DIE SET COMPONENTS

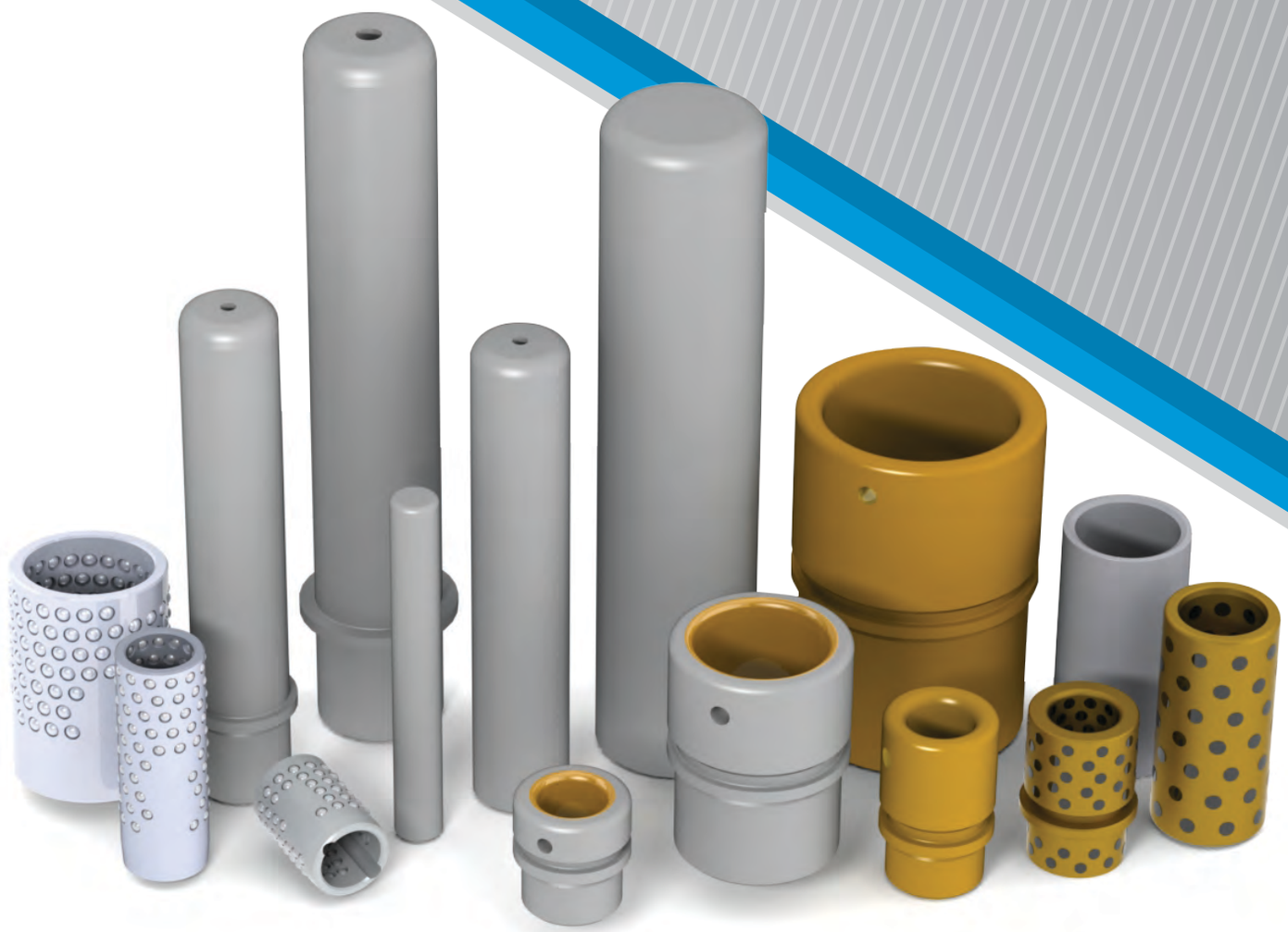

Click here for **3D CAD Link**

website

Quick link to
Main Website

catalog

Quick link to
Master Catalog

3D model

Quick link to
3D CAD Link

video

Quick link to
Videos

Note: When viewing the electronic version, simply click on the image in the right hand corner, and the link will automatically take you to 3D CAD Link.

To use 3D CAD Link:

Click on the
Configure & Download Button

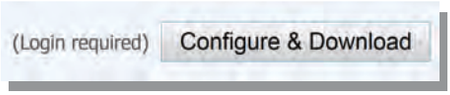

Login to your account

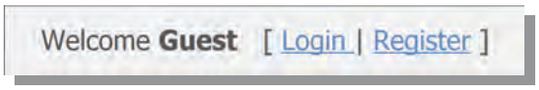

Finish your product configuration

uncontrolled if printed or downloaded

TABLE OF CONTENTS
TYPE D DIE SET COMPONENTS

	INCH	DESCRIPTION	PAGES
FRICTION	511 / 512	PLAIN-BEARING DEMOUNTABLE SHOULDER BUSHINGS (STEEL & BRONZE)	7500
FRICTION	512G	PLAIN-BEARING DEMOUNTABLE SHOULDER BUSHINGS LOW PROFILE (SELF LUBRICATING)	7510
FRICTION	512G	PLAIN-BEARING DEMOUNTABLE BUSHINGS MEDIUM SHOULDER (SELF LUBRICATING)	7520
FRICTION	512	PLAIN-BEARING DEMOUNTABLE SHOULDER BUSHINGS LOW PROFILE (BRONZE)	7530
FRICTION	515	PLAIN-BEARING PRESS FIT SLEEVE BUSHING	7540
FRICTION	517G	PLAIN-BEARING PRESS FIT SLEEVE BUSHING (SELF LUBRICATING)	7550
FRICTION	521	PLAIN-BEARING PRESS FIT STRAIGHT PINS	7560
FRICTION	521C	PLAIN-BEARING PRESS FIT STRAIGHT PINS (IOSSO® COATED)	7570
FRICTION	522	PLAIN-BEARING DEMOUNTABLE PINS	7580
FRICTION	522C	PLAIN-BEARING DEMOUNTABLE PINS (IOSSO® COATED)	7590
BALL BEARING	531	BALL BEARING PRESS FIT STRAIGHT PINS	7600-7610
BALL BEARING	532	BALL BEARING DEMOUNTABLE PINS	7620-7630
BALL BEARING	534	END CAP DIMENSIONS (INCH/METRIC)	7640
BALL BEARING	535	BALL BEARING CAGES	7650
BALL BEARING	536	BALL BEARING DEMOUNTABLE BUSHINGS	7660
BALL BEARING	537	BALL BEARING SLEEVE BUSHINGS	7670
BALL BEARING	530	BALL BEARING WASHER ASSEMBLY KIT	7680

	METRIC	DESCRIPTION	PAGES
FRICTION	611	PLAIN-BEARING DEMOUNTABLE SHOULDER BUSHINGS LOW PROFILE	7690
FRICTION	611	PLAIN-BEARING DEMOUNTABLE SHOULDER BUSHINGS	7700
FRICTION	613P	PLAIN-BEARING DEMOUNTABLE SHOULDER BUSHINGS LOW PROFILE (BRONZE)	7710
FRICTION	613P	PLAIN-BEARING DEMOUNTABLE SHOULDER BUSHINGS (BRONZE)	7720
FRICTION	621	PLAIN-BEARING PRESS FIT STRAIGHT PINS	7730-7740
FRICTION	622	PLAIN-BEARING DEMOUNTABLE PINS	7750-7780
BALL BEARING	631	BALL BEARING PRESS FIT STRAIGHT PINS	7790-7800
BALL BEARING	632	BALL BEARING DEMOUNTABLE PINS	7810-7820
BALL BEARING	634	END CAP DIMENSIONS (INCH/METRIC)	7640
BALL BEARING	635	BALL BEARING CAGES	7830
BALL BEARING	636	BALL BEARING DEMOUNTABLE BUSHINGS	7840
BALL BEARING	637	BALL BEARING SLEEVE BUSHINGS	7850
BALL BEARING	630	BALL BEARING WASHER ASSEMBLY KIT	7860

PIN AND BUSHING CLAMP LOCATIONS (INCH AND METRIC)	
PIN CLAMP ORIENTATIONS	7870
BUSHING CLAMP ORIENTATIONS	7880
CLAMP TYPES	7890-7900
PIN AND BUSHING CLAMP LOCATIONS	7910-7930

uncontrolled if printed or downloaded

PLAIN-BEARING DEMOUNTABLE SHOULDER BUSHINGS STEEL & BRONZE

INCH

SHORT-MEDIUM-LONG

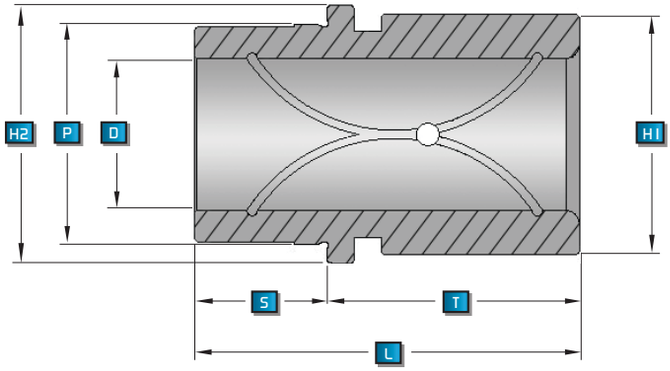

Diameter	D	P	H1	H2
3/4"	0.7503	1.1255	1.18	1.30
7/8"	0.8753	1.3755	1.42	1.55
1"	1.0003	1.5005	1.72	1.85
1 1/4"	1.2504	1.7505	1.94	2.10
1 1/2"	1.5005	2.0005	2.19	2.35
1 3/4"	1.7506	2.2505	2.50	2.66
2"	2.0006	2.5005	2.91	3.06
2 1/2"	2.5007	3.2505	3.66	3.81
3"	3.0009	3.7505	4.19	4.28

WHEN ORDERING PLEASE SPECIFY:

1. Part Number
2. Quantity

PLAIN-BEARING DEMOUNTABLE SHOULDER BUSHINGS STEEL & BRONZE

Diameter	T = SHORT					T = MEDIUM					T = LONG				
	T	S	L	Steel Part No.	Bronze Part No.	T	S	L	Steel Part No.	Bronze Part No.	T	S	L	Steel Part No.	Bronze Part No.
3/4"	0.750	0.688	1.438	511-0610	Upon Request	1.750	0.688	2.438	511-0620	Upon Request					
7/8"	0.750	0.688	1.438	511-0710		1.750	0.688	2.438	511-0720						
1"	0.813	0.938	1.750	511-0810	512-0810	1.750	0.938	2.688	511-0820	512-0820	3.000	0.938	3.938	511-0830	512-0830
1 1/4"	0.813	1.125	1.938	511-1010	512-1010	2.000	1.125	3.125	511-1020	512-1020	3.000	1.125	4.125	511-1030	512-1030
1 1/2"	0.813	1.188	2.000	511-1210	512-1210	2.000	1.188	3.188	511-1220	512-1220	3.000	1.188	4.188	511-1230	512-1230
1 3/4"	1.000	1.375	2.375	511-1410	512-1410	2.000	1.375	3.375	511-1420	512-1420	3.000	1.375	4.375	511-1430	512-1430
2"	1.000	1.625	2.625	511-1610	512-1610	2.000	1.625	3.625	511-1620	512-1620	3.000	1.625	4.625	511-1630	512-1630
2 1/2"	1.000	1.875	2.875	511-2010	512-2010	2.500	1.875	4.375	511-2020	512-2020	3.000	1.875	4.875	511-2030	512-2030
3"	1.000	1.875	2.875	511-2410	512-2410	2.500	1.875	4.375	511-2420	512-2420	3.000	1.875	4.875	511-2430	512-2430

PLAIN-BEARING DEMOUNTABLE SHOULDER BUSHINGS LOW PROFILE SELF-LUBRICATING

INCH

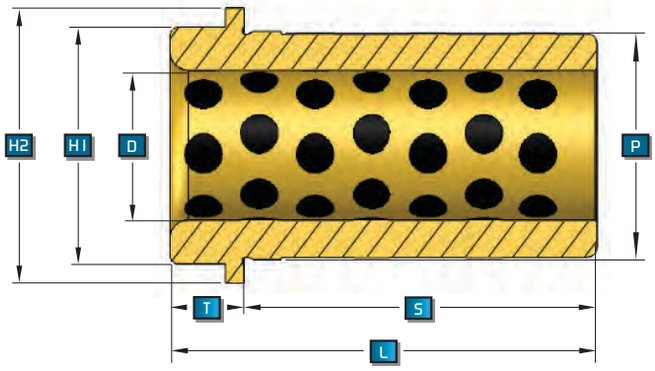

Diameter	D	P	H1	H2
1"	1.0006	1.5005	1.56	1.75
1 1/4"	1.2506	1.7505	1.94	2.12
1 1/2"	1.5006	2.0005	2.18	2.38
1 3/4"	1.7507	2.2505	2.44	2.62
2"	2.0007	2.5005	2.75	2.94
2 1/2"	2.5012	3.0005	3.18	3.38
3"	3.0014	3.5005	3.68	3.88
3 3/4"	3.7518	4.5005	4.68	4.88
4 1/2"	4.5025	5.5005	5.68	5.88

WHEN ORDERING PLEASE SPECIFY:

1. Part Number
2. Quantity

PLAIN-BEARING DEMOUNTABLE SHOULDER BUSHINGS LOW PROFILE SELF-LUBRICATING

Diameter	T	S	L	Part No.
1"	0.500	1.375	1.875	512G0805
1"	0.500	2.375	2.875	512G0805L
1 1/4"	0.500	1.875	2.375	512G1005
1 1/4"	0.500	2.875	3.375	512G1005L
1 1/2"	0.500	1.875	2.375	512G1205
1 1/2"	0.500	2.875	3.375	512G1205L
1 3/4"	0.500	2.375	2.875	512G1405
1 3/4"	0.500	3.375	3.875	512G1405L
2"	0.500	2.375	2.875	512G1605
2"	0.500	3.375	3.875	512G1605L
2 1/2"	0.375	2.625	3.000	512G2005
2 1/2"	0.375	3.625	4.000	512G2005L
2 1/2"	0.375	4.625	5.000	512G2005XL
3"	0.375	2.625	3.000	512G2405
3"	0.375	3.625	4.000	512G2405L
3"	0.375	4.625	5.000	512G2405XL
3"	0.375	5.625	6.000	512G2405XXL
3 3/4"	0.375	6.625	7.000	512G3005
4 1/2"	0.375	4.625	5.000	512G3605
4 1/2"	0.375	7.625	8.000	512G3605L

PLAIN-BEARING DEMOUNTABLE BUSHINGS MEDIUM SHOULDER SELF-LUBRICATING

INCH

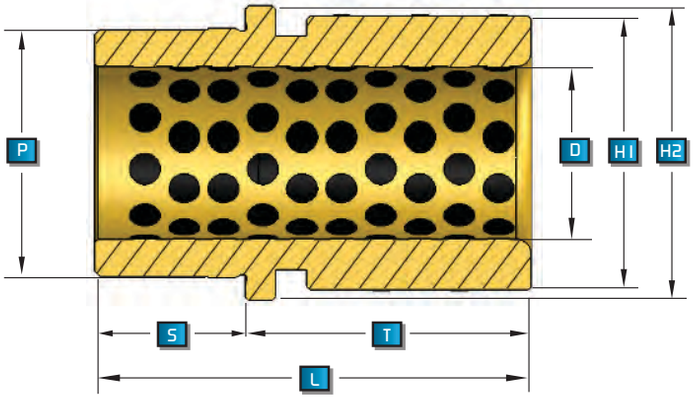

Diameter	D	P	H1	H2
1"	1.0005	1.5000	1.75	1.84
1 1/4"	1.2505	1.7500	1.94	2.10
1 1/2"	1.5005	2.0000	2.19	2.34
1 3/4"	1.7506	2.2500	2.50	2.66
2"	2.0006	2.5000	2.91	3.06
2 1/2"	2.5010	3.2500	3.66	3.81
3"	3.0012	3.7500	4.12	4.28

WHEN ORDERING PLEASE SPECIFY:

1. Part Number
2. Quantity

PLAIN-BEARING DEMOUNTABLE BUSHINGS MEDIUM SHOULDER SELF-LUBRICATING

Diameter	T = 1.750"			T = 2.000"			T = 2.500"		
	S	L	Part No.	S	L	Part No.	S	L	Part No.
1"	0.938	2.688	512G0820						
1 1/4"				1.125	3.125	512G1020			
1 1/2"				1.188	3.188	512G1220			
1 3/4"				1.375	3.375	512G1420			
2"				1.625	3.625	512G1620			
2 1/2"							1.875	4.375	512G2020
3"							1.875	4.375	512G2420

PLAIN-BEARING DEMOUNTABLE SHOULDER BUSHINGS LOW PROFILE BRONZE

INCH

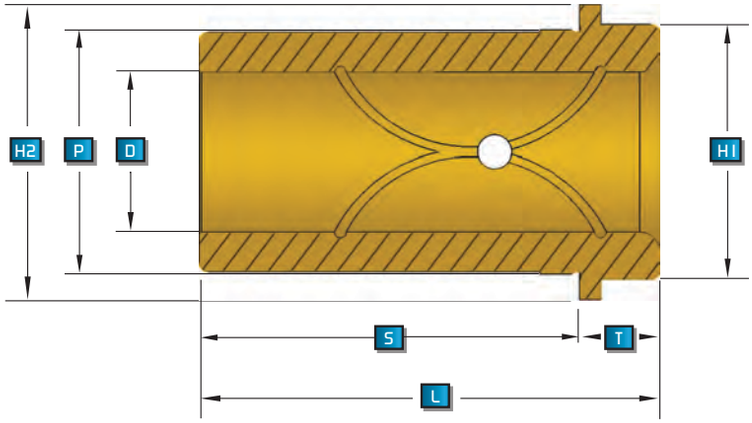

FOR T = LOW PROFILE ONLY				
Diameter	D	P	H1	H2
1"	1.0003	1.5005	1.59	1.85
1 1/4"	1.2504	1.7505	1.84	2.10
1 1/2"	1.5005	2.0005	2.06	2.35
1 3/4"	1.7506	2.2505	2.31	2.66
2"	2.0006	2.5005	2.63	3.06
2 1/2"	2.5007	3.2505	3.06	3.81

WHEN ORDERING PLEASE SPECIFY:

1. Part Number
2. Quantity

PLAIN-BEARING DEMOUNTABLE SHOULDER BUSHINGS LOW PROFILE BRONZE

T = LOW PROFILE				
Diameter	T	S	L	Part No.
1"	0.500	0.875	1.375	512-0805
1"	0.500	1.375	1.875	512-0805L
1"	0.500	2.375	2.875	512-0805XL
1 1/4"	0.500	0.875	1.375	512-1005
1 1/4"	0.500	1.875	2.375	512-1005L
1 1/4"	0.500	2.875	3.375	512-1005XL
1 1/2"	0.500	1.875	2.375	512-1205
1 1/2"	0.500	2.875	3.375	512-1205L
1 3/4"	0.500	2.375	2.875	512-1405
1 3/4"	0.500	3.375	3.875	512-1405L
2"	0.500	2.375	2.875	512-1605
2"	0.500	3.375	3.875	512-1605L
2 1/2"	0.500	2.625	3.125	512-2005
2 1/2"	0.500	3.625	4.125	512-2005L
2 1/2"	0.500	4.625	5.125	512-2005XL

PLAIN-BEARING PRESS FIT SLEEVE BUSHINGS

INCH

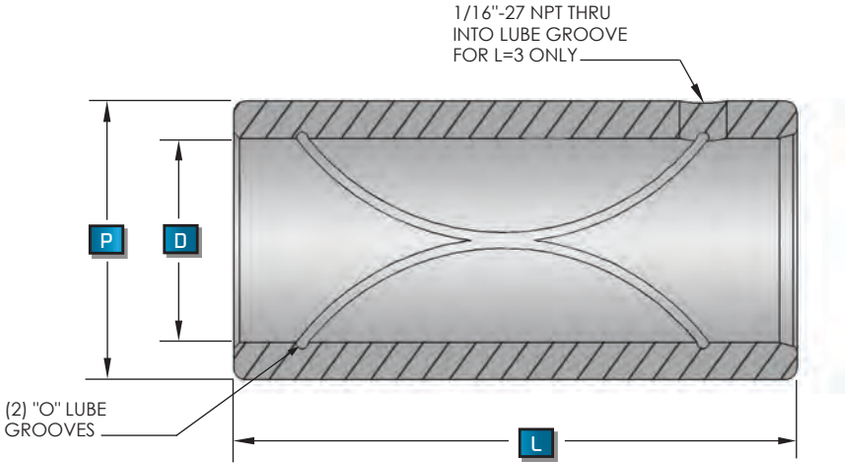

Diameter	D	P
1/2"	0.5002	0.8144
5/8"	0.6252	1.0019
3/4"	0.7503	1.1269
7/8"	0.8753	1.3774
1"	1.0003	1.5024
1 1/4"	1.2504	1.7524
1 1/2"	1.5005	2.0027
1 3/4"	1.7506	2.2527
2	2.0006	2.5027
2 1/2"	2.5007	3.2537

WHEN ORDERING PLEASE SPECIFY:

1. Part Number
2. Quantity

Unfinished Inside Diameter is 0.0006" undersize - available upon request

PLAIN-BEARING PRESS FIT SLEEVE BUSHINGS

Diameter	L = 1 1/2"	L = 1 3/4"	L = 2"	L = 3"
	Part No.	Part No.	Part No.	Part No.
1/2"	515-0403			515-0406
5/8"	515-0503			515-0506
3/4"		515-06035		515-0606
7/8"		515-07035		515-0706
1"		515-08035		515-0806
1 1/4"			515-1004	515-1006
1 1/2"			515-1204	515-1206
1 3/4"				515-1406
2				515-1606
2 1/2"				515-2006

PLAIN-BEARING PRESS FIT SLEEVE BUSHINGS SELF-LUBRICATING

INCH

Diameter	D	P
3/4"	0.7505	1.1255
7/8"	0.8755	1.2505
1"	1.0005	1.3755
1 1/4"	1.2505	1.6255
1 1/2"	1.5005	2.0005
1 3/4"	1.7505	2.2505
2"	2.0005	2.5005
2 1/4"	2.2505	2.7505
2 1/2"	2.5005	3.2505
3"	3.0005	3.7505

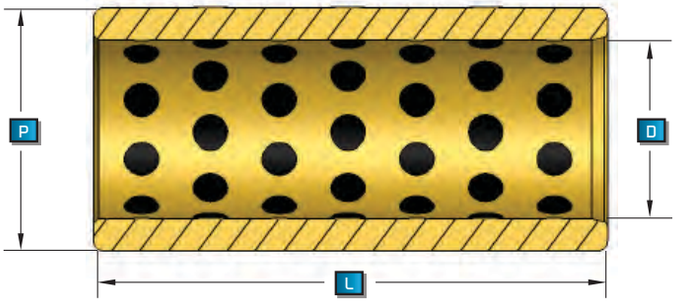

WHEN ORDERING PLEASE SPECIFY:

1. Part Number
2. Quantity

PLAIN-BEARING PRESS FIT SLEEVE BUSHINGS SELF-LUBRICATING

L	NOMINAL ID									
	3/4	7/8	1	1 1/4	1 1/2	1 3/4	2	2 1/4	2 1/2	3
7/8	517G06-7									
1 1/4		517G07-10	517G08-10	517G10-10	517G12-10	517G14-10	517G16-10			
1 3/8	517G06-11	517G07-11	517G08-11	517G10-11	517G12-11					
1 1/2	517G06-12	517G07-12	517G08-12	517G10-12	517G12-12	517G14-12	517G16-12	517G18-12	517G20-12	
1 3/4			517G08-14	517G10-14	517G12-14	517G14-14				
1 7/8				517G10-15	517G12-15					
2			517G08-16	517G10-16	517G12-16	517G14-16	517G16-16	517G18-16	517G20-16	517G24-16
2 1/2						517G14-20	517G16-20	517G18-20		517G24-20
3			517G08-24	517G10-24	517G12-24	517G14-24	517G16-24	517G18-24	517G20-24	517G24-24
3 1/2						517G14-28				517G24-28
3 7/8							517G16-31			
4						517G14-32				
4 7/8									517G20-39	517G24-39

PLAIN-BEARING PRESS FIT STRAIGHT PINS

INCH

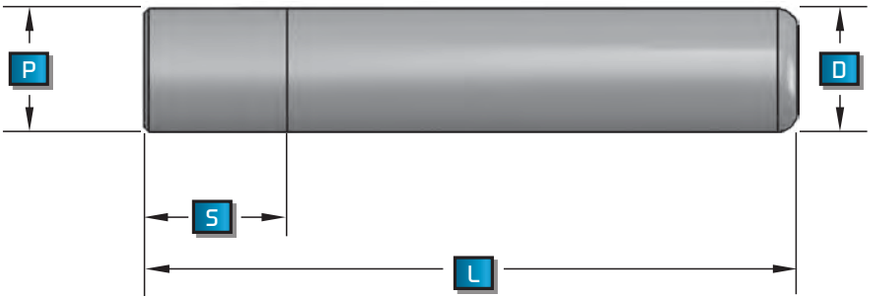

D (nominal)	P	S
1/2"	0.5017	1.000-1.125*
5/8"	0.6267	1.125
3/4"	0.7520	1.000-1.125*
7/8"	0.8770	1.250
1"	1.0020	1.500
1 1/4"	1.2525	1.750
1 1/2"	1.5025	1.750-2.000**
1 3/4"	1.7525	2.250
2"	2.0025	2.500
2 1/2"	2.5032	3.500
3"	3.0032	3.500

WHEN ORDERING PLEASE SPECIFY:

1. Part Number
2. Quantity

*** 1.000 WHEN L = 3 1/2", 1.125 WHEN L ≥ 4"**

**** 1.750 WHEN L ≤ 7", 2.000 WHEN L ≥ 7 1/2"**

PLAIN-BEARING PRESS FIT STRAIGHT PINS

L	Dia = 1/2"	Dia = 5/8"	Dia = 3/4"	Dia = 7/8"	Dia = 1"	Dia = 1 1/4"	Dia = 1 1/2"	Dia = 1 3/4"	Dia = 2"	Dia = 2 1/2"	Dia = 3"
	Part No.	Part No.	Part No.	Part No.	Part No.	Part No.	Part No.	Part No.	Part No.	Part No.	Part No.
3 1/2"	Upon Request	Upon Request	521-0614								
4"			521-0616	521-0716	521-0816						
4 1/4"			521-0617	521-0717	521-0817						
4 1/2"			521-0618	521-0718	521-0818	521-1018	521-1218				
4 3/4"			521-0619	521-0719	521-0819	521-1019	521-1219				
5"			521-0620	521-0720	521-0820	521-1020	521-1220				
5 1/4"				521-0721	521-0821	521-1021	521-1221				
5 1/2"			521-0622	521-0722	521-0822	521-1022	521-1222				
5 3/4"				521-0723	521-0823	521-1023	521-1223				
6"			521-0624	521-0724	521-0824	521-1024	521-1224	521-1424	521-1624		
6 1/2"				521-0726	521-0826	521-1026	521-1226	521-1426	521-1626		
7"			521-0628	521-0728	521-0828	521-1028	521-1228	521-1428	521-1628		
7 1/2"				521-0730	521-0830	521-1030	521-1230	521-1430	521-1630		
8"			521-0632	521-0732	521-0832	521-1032	521-1232	521-1432	521-1632	521-2032	521-2432
8 1/2"					521-0834	521-1034	521-1234	521-1434	521-1634	521-2034	521-2434
9"					521-0836	521-1036	521-1236	521-1436	521-1636	521-2036	521-2436
10"					521-0840	521-1040	521-1240	521-1440	521-1640	521-2040	521-2440
11"					521-0844	521-1044	521-1244	521-1444	521-1644	521-2044	521-2444
12"					521-0848	521-1048	521-1248	521-1448	521-1648	521-2048	521-2448
13"							521-1252		521-1652	521-2052	521-2452
14"							521-1256	521-1456	521-1656	521-2056	521-2456
15"							521-1260				
17"									521-1668	521-2068	521-2468
20"									521-1680	521-2080	521-2480

PLAIN-BEARING PRESS FIT STRAIGHT PINS IOSSO® COATED

INCH

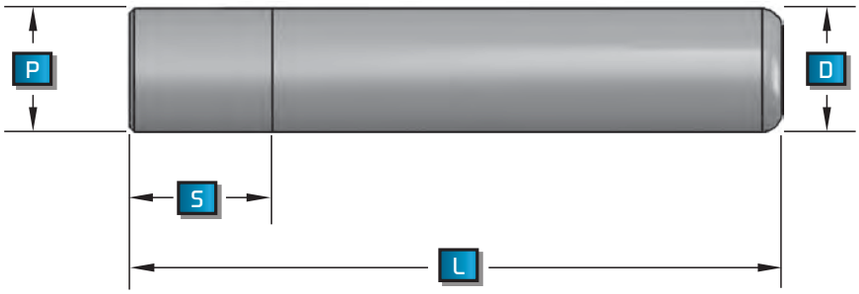

D (nominal)	P	S
1/2"	0.5017	1.000-1.125*
5/8"	0.6267	1.125
3/4"	0.7520	1.000-1.125*
7/8"	0.8770	1.250
1"	1.0020	1.500
1 1/4"	1.2525	1.750
1 1/2"	1.5025	1.750-2.000**
1 3/4"	1.7525	2.250
2"	2.0025	2.500
2 1/2"	2.5032	3.500
3"	3.0032	3.500

WHEN ORDERING PLEASE SPECIFY:

1. Part Number
2. Quantity

*** 1.000 WHEN L = 3 1/2", 1.125 WHEN L ≥ 4"**

**** 1.750 WHEN L ≤ 7", 2.000 WHEN L ≥ 7 1/2"**

PLAIN-BEARING PRESS FIT STRAIGHT PINS IOSSO® COATED

L	Dia = 1/2"	Dia = 5/8"	Dia = 3/4"	Dia = 7/8"	Dia = 1"	Dia = 1 1/4"	Dia = 1 1/2"	Dia = 1 3/4"	Dia = 2"	Dia = 2 1/2"	Dia = 3"
	Part No.	Part No.	Part No.	Part No.	Part No.	Part No.	Part No.	Part No.	Part No.	Part No.	Part No.
3 1/2"	521C0414		521C0614								
4"	521C0416	521C0516	521C0616	521C0716	521C0816						
4 1/4"	521C0417	521C0517	521C0617	521C0717	521C0817						
4 1/2"	521C0418	521C0518	521C0618	521C0718	521C0818	521C1018	521C1218				
4 3/4"	521C0419	521C0519	521C0619	521C0719	521C0819	521C1019	521C1219				
5"	521C0420	521C0520	521C0620	521C0720	521C0820	521C1020	521C1220				
5 1/4"	521C0421			521C0721	521C0821	521C1021	521C1221				
5 1/2"	521C0422	521C0522	521C0622	521C0722	521C0822	521C1022	521C1222				
5 3/4"				521C0723	521C0823	521C1023	521C1223				
6"		521C0524	521C0624	521C0724	521C0824	521C1024	521C1224	521C1424	521C1624		
6 1/2"				521C0726	521C0826	521C1026	521C1226	521C1426	521C1626		
7"				521C0728	521C0828	521C1028	521C1228	521C1428	521C1628		
7 1/2"				521C0730	521C0830	521C1030	521C1230	521C1430	521C1630		
8"				521C0732	521C0832	521C1032	521C1232	521C1432	521C1632	521C2032	521C2432
8 1/2"					521C0834	521C1034	521C1234	521C1434	521C1634	521C2034	521C2434
9"					521C0836	521C1036	521C1236	521C1436	521C1636	521C2036	521C2436
10"					521C0840	521C1040	521C1240	521C1440	521C1640	521C2040	521C2440
11"					521C0844	521C1044	521C1244	521C1444	521C1644	521C2044	521C2444
12"					521C0848	521C1048	521C1248	521C1448	521C1648	521C2048	521C2448
13"									521C1652	521C2052	521C2452
14"								521C1456	521C1656	521C2056	521C2456
15"											
17"									521C1668	521C2068	521C2468
20"									521C1680	521C2080	521C2480

PLAIN-BEARING DEMOUNTABLE PINS

INCH

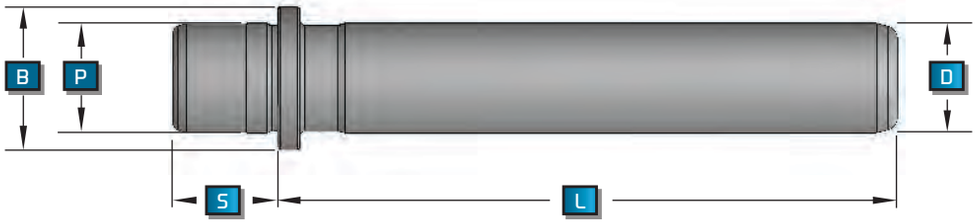

D (nominal)	P	B	S
7/8"	0.8760	1.188	0.938
1"	1.0010	1.313	1.188
1 1/4"	1.2510	1.563	1.188
1 1/2"	1.5010	1.875	1.563
1 3/4"	1.7511	2.250	1.688
2"	2.0011	2.500	1.938
2 1/2"	2.5011	3.031	1.938
3"	3.0010	3.500	2.438

WHEN ORDERING PLEASE SPECIFY:

1. Part Number
2. Quantity

PLAIN-BEARING DEMOUNTABLE PINS

L	Dia = 7/8"	Dia = 1"	Dia = 1 1/4"	Dia = 1 1/2"	Dia = 1 3/4"	Dia = 2"	Dia = 2 1/2"	Dia = 3"
	Part No.	Part No.	Part No.	Part No.	Part No.	Part No.	Part No.	Part No.
2 1/2"		522-0810						
2 3/4"	522-0711	522-0811	522-1011	522-1211				
3"	522-0712	522-0812	522-1012	522-1212				
3 1/4"	522-0713	522-0813	522-1013	522-1213				
3 1/2"	522-0714	522-0814	522-1014	522-1214	522-1414	522-1614		
3 3/4"	522-0715	522-0815	522-1015	522-1215				
4"	522-0716	522-0816	522-1016	522-1216	522-1416	522-1616		
4 1/4"	522-0717	522-0817	522-1017	522-1217				
4 1/2	522-0718	522-0818			522-1418	522-1618	522-2018	522-2418
4 3/4"	522-0719		522-1019	522-1219				
5"		522-0820			522-1420	522-1620	522-2020	522-2420
5 1/4"	522-0721		522-1021	522-1221				
5 1/2"		522-0822			522-1422	522-1622	522-2022	522-2422
5 3/4"	522-0723		522-1023	522-1223				
6"		522-0824			522-1424	522-1624		
6 1/4"	522-0725		522-1025	522-1225				
6 1/2"		522-0826			522-1426	522-1626	522-2026	522-2426
6 3/4"	522-0727		522-1027	522-1227				
7"		522-0828						
7 1/4"			522-1029	522-1229				
7 1/2"		522-0830			522-1430	522-1630	522-2030	522-2430
8 1/4"			522-1033	522-1233				
8 1/2"					522-1434	522-1634	522-2034	522-2434
9 1/4"			522-1037	522-1237				
9 1/2"					522-1438	522-1638	522-2038	522-2438
10 1/4 "			522-1041	522-1241				
10 1/2"						522-1642	522-2042	522-2442
11 1/2"					522-1446	522-1646		
13 1/2"							522-2054	522-2454
14 1/2"						522-1658		
16 1/2"							522-2066	522-2466
17 1/2"						522-1670		

PLAIN-BEARING DEMOUNTABLE PINS IOSSO® COATED

INCH

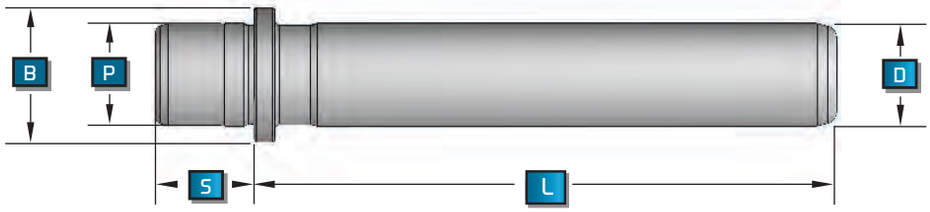

D (nominal)	P	B	S
7/8"	0.8760	1.188	0.938
1"	1.0010	1.313	1.188
1 1/4"	1.2510	1.563	1.188
1 1/2"	1.5010	1.875	1.563
1 3/4"	1.7511	2.250	1.688
2"	2.0011	2.500	1.938
2 1/2"	2.5011	3.031	1.938
3"	3.0010	3.500	2.438

WHEN ORDERING PLEASE SPECIFY:

1. Part Number
2. Quantity

PLAIN-BEARING DEMOUNTABLE PINS IOSSO® COATED

L	Dia = 7/8"	Dia = 1"	Dia = 1 1/4"	Dia = 1 1/2"	Dia = 1 3/4"	Dia = 2"	Dia = 2 1/2"	Dia = 3"
	Part No.	Part No.	Part No.	Part No.	Part No.	Part No.	Part No.	Part No.
2 1/2"		522C0810						
2 3/4"	522C0711	522C0811	522C1011	522C1211				
3"	522C0712	522C0812	522C1012	522C1212				
3 1/4"	522C0713	522C0813	522C1013	522C1213				
3 1/2"	522C0714	522C0814	522C1014	522C1214	522C1414	522C1614		
3 3/4"	522C0715	522C0815	522C1015	522C1215				
4"	522C0716	522C0816	522C1016	522C1216	522C1416	522C1616		
4 1/4"	522C0717	522C0817	522C1017	522C1217				
4 1/2	522C0718	522C0818			522C1418	522C1618	522C2018	522C2418
4 3/4"	522C0719		522C1019	522C1219				
5"		522C0820			522C1420	522C1620	522C2020	522C2420
5 1/4"	522C0721		522C1021	522C1221				
5 1/2"		522C0822			522C1422	522C1622	522C2022	522C2422
5 3/4"	522C0723		522C1023	522C1223				
6"		522C0824			522C1424	522C1624		
6 1/4"	522C0725		522C1025	522C1225				
6 1/2"		522C0826			522C1426	522C1626	522C2026	522C2426
6 3/4"	522C0727		522C1027	522C1227				
7"		522C0828						
7 1/4"			522C1029	522C1229				
7 1/2"		522C0830			522C1430	522C1630	522C2030	522C2430
8 1/4"			522C1033	522C1233				
8 1/2"					522C1434	522C1634	522C2034	522C2434
9 1/4"			522C1037	522C1237				
9 1/2"					522C1438	522C1638	522C2038	522C2438
10 1/4 "			522C1041	522C1241				
10 1/2"						522C1642	522C2042	522C2442
11 1/2"					522C1446	522C1646		
13 1/2"							522C2054	522C2454
14 1/2"						522C1658		
16 1/2"							522C2066	522C2466
17 1/2"						522C1670		

BALL BEARING PRESS FIT STRAIGHT PINS L=3.250-8.750

INCH

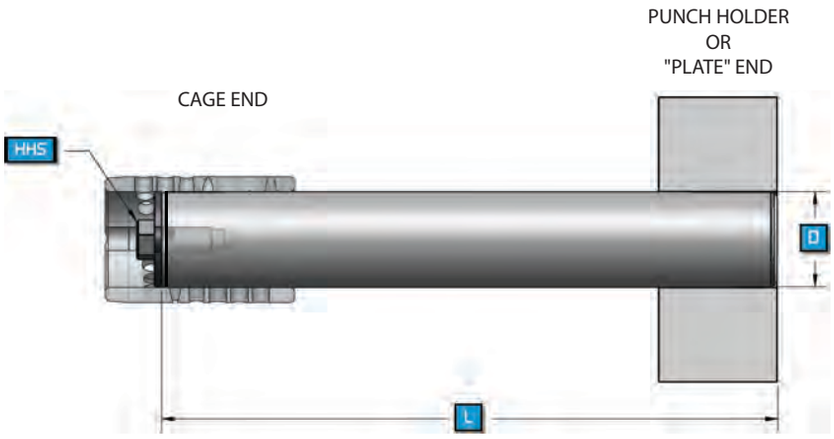

D (nominal)	HHS
1"	5/16"-18
1 1/4"	5/16"-18
1 1/2"	3/8"-16
1 3/4"	3/8"-16
2"	3/8"-16
2 1/2"	1/2"-13
3"	1/2"-13

WHEN ORDERING PLEASE SPECIFY:

1. Part Number
2. Quantity

Hardened to 60 +/- 2 Rc

BALL BEARING PRESS FIT STRAIGHT PINS - LENGTH 3.250-8.750

L	Dia = 1"	Dia = 1 1/4"	Dia = 1 1/2"	Dia = 1 3/4"	Dia = 2"	Dia = 2 1/2"	Dia = 3"
	Part No.	Part No.	Part No.	Part No.	Part No.	Part No.	Part No.
3 1/4	531-0813						
3 3/4	531-0815						
4 1/4	531-0817	531-1017	531-1217				
4 1/2	531-0818						
4 3/4	531-0819	531-1019					
5	531-0820		531-1220	531-1420			
5 1/4	531-0821	531-1021					
5 1/2	531-0822	531-1022					
5 3/4	531-0823	531-1023	531-1223	531-1423	531-1623		
6	531-0824	531-1024	531-1224				
6 1/2	531-0826	531-1026	531-1226	531-1426	531-1626		
7	531-0828	531-1028	531-1228	531-1428			
7 1/4					531-1629		
7 1/2	531-0830	531-1030	531-1230	531-1430	531-1630		
7 3/4					531-1631		
8	531-0832	531-1032	531-1232	531-1432	531-1632	531-2032	
8 1/2	531-0834	531-1034	531-1234	531-1434	531-1634		531-2434
8 3/4						531-2035	

BALL BEARING PRESS FIT STRAIGHT PINS L=9.000-20.000

INCH

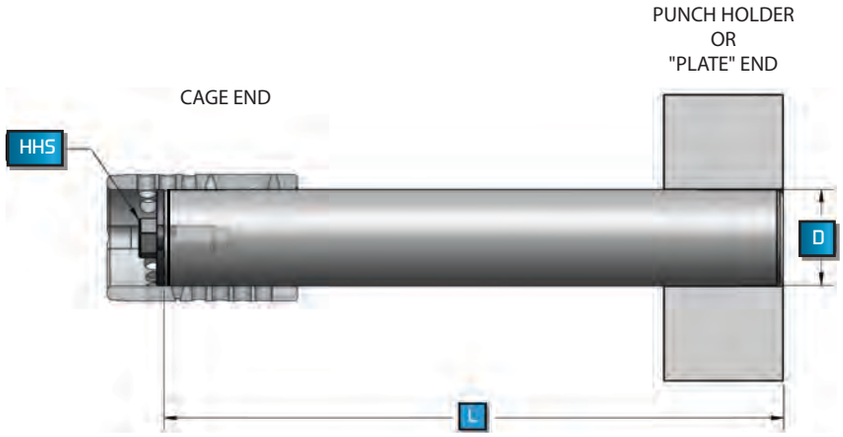

D (nominal)	HHS
1"	5/16"-18
1 1/4"	5/16"-18
1 1/2"	3/8"-16
1 3/4"	3/8"-16
2"	3/8"-16
2 1/2"	1/2"-13
3"	1/2"-13

WHEN ORDERING PLEASE SPECIFY:

1. Part Number
2. Quantity

Hardened to 60 +/- 2 Rc

BALL BEARING PRESS FIT STRAIGHT PINS - LENGTH 9.000-20.000

L	Dia = 1"	Dia = 1 1/4"	Dia = 1 1/2"	Dia = 1 3/4"	Dia = 2"	Dia = 2 1/2"	Dia = 3"
	Part No.	Part No.	Part No.	Part No.	Part No.	Part No.	Part No.
9	531-0836	531-1036	531-1236	531-1436	531-1636		
9 1/4							531-2437
9 1/2			531-1238	531-1438	531-1638	531-2038	
10		531-1040	531-1240	531-1440	531-1640	531-2040	531-2440
10 1/2			531-1242	531-1442	531-1642		
11		531-1044	531-1244	531-1444	531-1644	531-2044	531-2444
11 1/2			531-1246	531-1446	531-1646		
12		531-1048	531-1248	531-1448	531-1648	531-2048	531-2448
12 1/2			531-1250	531-1450	531-1650		
13			531-1252	531-1452	531-1652	531-2052	531-2452
14			531-1256	531-1456	531-1656	531-2056	531-2456
15				531-1460	531-1660		
16					531-1664		
17				531-1468	531-1668	531-2068	531-2468
18					531-1672	531-2072	
20						531-2080	531-2480

BALL BEARING DEMOUNTABLE PINS L=2.50-8.750

INCH

D (nominal)	P	B	S	HHS
1"	1.0000	1.313	1.188	5/16"-18
1 1/4"	1.2500	1.563	1.188	5/16"-18
1 1/2"	1.5000	1.875	1.438	3/8"-16
1 3/4"	1.7500	2.250	1.688	3/8"-16
2"	2.0000	2.500	1.938	3/8"-16
2 1/2"	2.5000	3.031	1.938	1/2"-13
3"	3.0000	3.500	2.438	1/2"-13

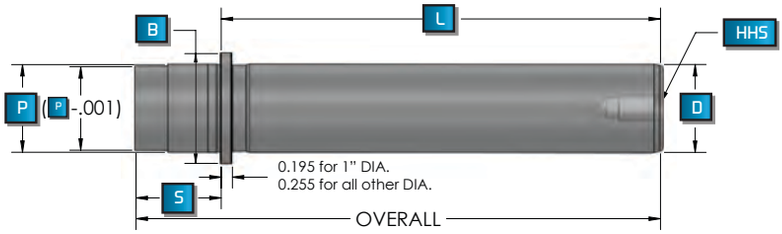

WHEN ORDERING PLEASE SPECIFY:

1. Part Number
2. Quantity

Hardened to 60 +/- 2 Rc

BALL BEARING DEMOUNTABLE PINS - LENGTH 2.50 - 8.750

L	Dia = 1"	Dia = 1 1/4"	Dia = 1 1/2"	Dia = 1 3/4"	Dia = 2"	Dia = 2 1/2"	Dia = 3"
	Part No.	Part No.	Part No.	Part No.	Part No.	Part No.	Part No.
2 1/2	532-0810						
2 3/4	532-0811						
3	532-0812						
3 1/4	532-0813	532-1013	532-1213				
3 1/2	532-0814	532-1014	532-1214				
3 3/4	532-0815	532-1015	532-1215	532-1415			
4	532-0816	532-1016	532-1216	532-1416			
4 1/4	532-0817	532-1017	532-1217	532-1417	532-1617		
4 1/2	532-0818	532-1018	532-1218	532-1418	532-1618		
4 3/4	532-0819	532-1019		532-1419	532-1619		
5			532-1220		532-1620		
5 1/4	532-0821	532-1021		532-1421	532-1621		
5 1/2			532-1222		532-1622		
5 3/4	532-0823	532-1023		532-1423	532-1623		
6			532-1224		532-1624	532-2024	532-2424
6 1/4	532-0825	532-1025		532-1425			
6 1/2			532-1226		532-1626	532-2026	532-2426
6 3/4	532-0827	532-1027		532-1427			
7			532-1228		532-1628	532-2028	
7 1/4	532-0829	532-1029		532-1429			
7 1/2			532-1230		532-1630		532-2430
7 3/4	532-0831	532-1031		532-1431			
8			532-1232		532-1632	532-2032	
8 1/4				532-1433			
8 1/2			532-1234		532-1634		532-2434
8 3/4		532-1035		532-1435			

BALL BEARING DEMOUNTABLE PINS L=9.000-18.000

INCH

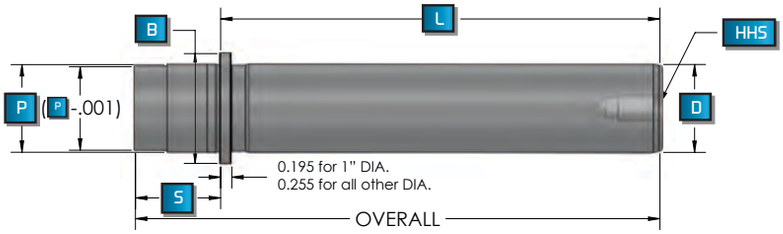

D (nominal)	P	B	S	HHS
1"	1.0000	1.313	1.188	5/16"-18
1 1/4"	1.2500	1.563	1.188	5/16"-18
1 1/2"	1.5000	1.875	1.438	3/8"-16
1 3/4"	1.7500	2.250	1.688	3/8"-16
2"	2.0000	2.500	1.938	3/8"-16
2 1/2"	2.5000	3.031	1.938	1/2"-13
3"	3.0000	3.500	2.438	1/2"-13

WHEN ORDERING PLEASE SPECIFY:

1. Part Number
2. Quantity

Hardened to 60 +/- 2 Rc

BALL BEARING DEMOUNTABLE PINS - LENGTH 9.000 - 18.000

L	Dia = 1"	Dia = 1 1/4"	Dia = 1 1/2"	Dia = 1 3/4"	Dia = 2"	Dia = 2 1/2"	Dia = 3"
	Part No.	Part No.	Part No.	Part No.	Part No.	Part No.	Part No.
9			532-1236		532-1636	532-2036	
9 1/4				532-1437			
9 1/2			532-1238		532-1638		532-2438
9 3/4		532-1039		532-1439			
10			532-1240		532-1640	532-2040	
10 1/4				532-1441			
10 1/2			532-1242		532-1642		532-2442
10 3/4		532-1043		532-1443			
11			532-1244		532-1644	532-2044	
11 1/4				532-1445			
11 1/2			532-1246				532-2446
12					532-1648	532-2048	
12 1/4				532-1449			
12 1/2			532-1250				532-2450
13					532-1652	532-2052	
13 1/4				532-1453			
13 1/2							532-2454
14					532-1656	532-2056	
14 1/4				532-1457			
14 1/2							532-2458
15					532-1660	532-2060	
15 1/4				532-1461			
16					532-1664		
17 1/2							532-2470
18						532-2072	

BALL BEARING MAXICAGE™ END CAP DIMENSIONS

INCH/METRIC

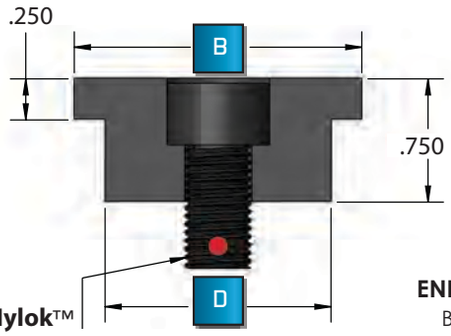

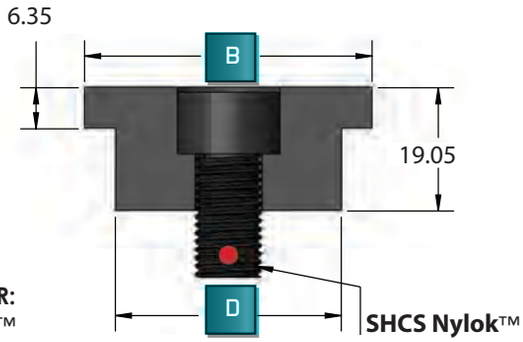

END CAP DIMENSIONS FOR:
BALL BEARING MAXICAGE™
TYPE D PRESS FIT STRAIGHT PINS
& TYPE D DEMOUNTABLE PINS
(INCH & METRIC)

TYPE D - INCH END CAP DIMENSIONS							
Pin Dia.	1	1 1/4	1 1/2	1 3/4	2	2 1/2	3
Part No.	534-0804	534-1004	534-1204	534-1404	534-1604	534-2004	534-2404
D	7/8	1 1/8	1 3/8	1 5/8	1 7/8	2 3/8	2 7/8
B	1 1/4	1 1/2	1 3/4	2	2 3/8	2 7/8	3 3/8
SHCS	5/16"-18 SHCS 1" LONG	5/16"-18 SHCS 1" LONG	3/8"-16 SHCS 1" LONG	3/8"-16 SHCS 1" LONG	3/8"-16 SHCS 1" LONG	1/2"-13 SHCS 1" LONG	1/2"-13 SHCS 1" LONG

TYPE D - METRIC END CAP DIMENSIONS						
Pin Dia.	25	32	40	50	63	80
Part No.	634-2512	634-3212	634-4012	634-5012	634-6312	634-8012
D	22,23	28,58	34,93	47,63	60,33	73,03
B	31,75	38,10	44,45	60,33	73,03	85,73
SHCS	M6x1.0 SHCS 20MM LONG	M6x1.0 SHCS 20MM LONG	M10x1.5 SHCS 25MM LONG	M10x1.5 SHCS 25MM LONG	M10x1.5 SHCS 25MM LONG	M10x1.5 SHCS 25MM LONG

BALL BEARING CAGES

INCH

WHEN ORDERING PLEASE SPECIFY:

1. Part Number
2. Quantity

Note:

1. 3/16" ball dia. Pin dia. 1" ≤ 1 3/4"
2. 1/4" ball dia. Pin dia. ≥ 2"

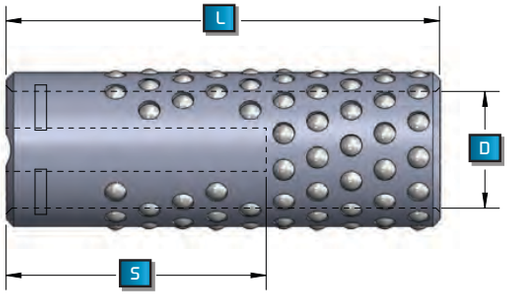

BALL BEARING CAGES - DIAMETER 1" - 1 3/4"

D (nominal)	L	S	Ball Dia	Part No.
1"	1.500	0.44	.1875	535-0806-1
1"	2.000	0.69	.1875	535-0808-1
1"	2.000	1.06	.1875	535-0808-2
1"	2.500	1.31	.1875	535-0810-2
1"	3.000	1.56	.1875	535-0812-2
1"	3.250	1.81	.1875	535-0813-2
1"	3.500	2.06	.1875	535-0814-2
1"	3.750	2.31	.1875	535-0815-2
1 1/4"	1.500	0.44	.1875	535-1006-1
1 1/4"	2.000	0.69	.1875	535-1008-1
1 1/4"	2.750	1.44	.1875	535-1011-2
1 1/4"	3.250	1.69	.1875	535-1013-2
1 1/4"	3.750	1.94	.1875	535-1015-2
1 1/4"	4.000	2.19	.1875	535-1016-2
1 1/4"	4.250	2.44	.1875	535-1017-2
1 1/4"	4.750	2.94	.1875	535-1019-2
1 1/2"	2.000	0.69	.1875	535-1208-1
1 1/2"	2.500	0.94	.1875	535-1210-1
1 1/2"	2.750	1.44	.1875	535-1211-2
1 1/2"	3.500	1.81	.1875	535-1214-2
1 1/2"	4.250	2.19	.1875	535-1217-2
1 1/2"	4.500	2.44	.1875	535-1218-2
1 1/2"	5.000	2.94	.1875	535-1220-2
1 1/2"	5.500	3.44	.1875	535-1222-2
1 1/2"	6.000	3.94	.1875	535-1224-2
1 3/4"	2.500	0.94	.1875	535-1410-1
1 3/4"	3.000	1.19	.1875	535-1412-1
1 3/4"	3.250	1.69	.1875	535-1413-2
1 3/4"	4.000	2.06	.1875	535-1416-2

BALL BEARING CAGES - DIAMETER 1 3/4" - 3"

D (nominal)	L	S	Ball Dia	Part No.
1 3/4"	4.750	2.44	.1875	535-1419-2
1 3/4"	5.250	2.94	.1875	535-1421-2
1 3/4"	5.750	3.44	.1875	535-1423-2
1 3/4"	6.250	3.94	.1875	535-1425-2
1 3/4"	6.750	4.44	.1875	535-1427-2
2"	3.000	1.19	.2500	535-1612-1
2"	3.500	1.44	.2500	535-1614-1
2"	3.750	1.94	.2500	535-1615-2
2"	4.500	2.31	.2500	535-1618-2
2"	5.250	2.69	.2500	535-1621-2
2"	5.750	3.06	.2500	535-1623-2
2"	6.000	3.44	.2500	535-1624-2
2"	6.500	3.94	.2500	535-1626-2
2"	7.000	4.44	.2500	535-1628-2
2"	7.500	4.94	.2500	535-1630-2
2 1/2"	4.000	1.69	.2500	535-2016-1
2 1/2"	5.750	3.00	.2500	535-2023-2
2 1/2"	6.500	3.38	.2500	535-2026-2
2 1/2"	7.250	3.75	.2500	535-2029-2
2 1/2"	7.750	4.25	.2500	535-2031-2
2 1/2"	8.250	4.75	.2500	535-2033-2
2 1/2"	8.750	5.25	.2500	535-2035-2
3"	4.000	1.69	.2500	535-2416-1
3"	5.750	3.00	.2500	535-2423-2
3"	6.500	3.38	.2500	535-2426-2
3"	7.25	3.75	.2500	535-2429-2
3"	7.75	4.25	.2500	535-2431-2
3"	8.25	4.75	.2500	535-2433-2
3"	8.75	5.25	.2500	535-2435-2

BALL BEARING DEMOUNTABLE BUSHINGS

INCH

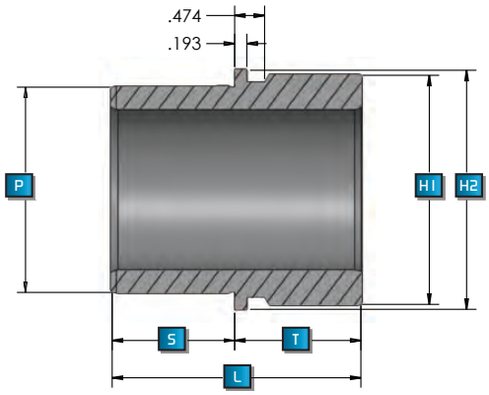

Diameter	P	S	H1	H2
1"	1.8750	1.188	2.13	2.28
1 1/4"	2.1250	1.188	2.38	2.53
1 1/2"	2.5000	1.438	2.88	3.03
1 3/4"	2.7500	1.688	3.13	3.28
2"	3.2500	1.938	3.63	3.78
2 1/2"	3.7500	1.938	4.13	4.28
3"	4.2500	1.938	4.75	4.91

WHEN ORDERING PLEASE SPECIFY:

1. Part Number
2. Quantity

Hardened to 60 +/- 2 Rc

BALL BEARING DEMOUNTABLE BUSHINGS

Diameter	T = 1.25"		T = 1.50"		T = 1.75"		T = 2.00"		T = 2.25"		T = 2.50"		T = 2.75"		T = 3.00"	
	L	Part No.	L	Part No.	L	Part No.	L	Part No.	L	Part No.	L	Part No.	L	Part No.	L	Part No.
1"	2.438	536-0811			2.938	536-0813			3.438	536-0821			3.938	536-0823		
1 1/4"					2.938	536-1013			3.438	536-1021			3.938	536-1023		
1 1/2"			2.938	536-1212					3.688	536-1221					4.438	536-1230
1 3/4"					3.438	536-1413					4.188	536-1422				
2"			2.938	536-1612			3.938	536-1620					4.688	536-1623		
2 1/2"			3.438	536-2012			3.938	536-2020							4.938	536-2030
3"							3.938	536-2420							4.938	536-2430

BALL BEARING DEMOUNTABLE BUSHINGS

Diameter	T = 3.25"		T = 3.50"		T = 4.00"		T = 4.25"		T = 4.75"		T = 5.00"		T = 5.50"	
	L	Part No.	L	Part No.	L	Part No.	L	Part No.	L	Part No.	L	Part No.	L	Part No.
1"														
1 1/4"														
1 1/2"			4.938	536-1232										
1 3/4"	4.938	536-1431												
2"			5.438	536-1632			6.188	536-1641			6.938	536-1650		
2 1/2"					5.938	536-2040			6.688	536-2043			7.438	536-2052
3"					5.938	536-2440			6.688	536-2443			7.438	536-2452

BALL BEARING SLEEVE BUSHINGS

INCH

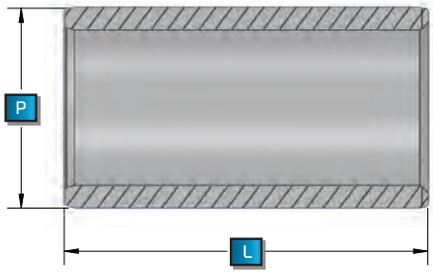

Diameter	P
1"	1.8750
1 1/4"	2.1250
1 1/2"	2.5000
1 3/4"	2.7500
2"	3.2500
2 1/2"	3.7500
3"	4.2500

WHEN ORDERING PLEASE SPECIFY:

1. Part Number
2. Quantity

Hardened to 60 +/- 2 Rc

BALL BEARING SLEEVE BUSHINGS

L	Dia = 1"	Dia = 1 1/4"	Dia = 1 1/2"	Dia = 1 3/4"	Dia = 2"	Dia = 2 1/2"	Dia = 3"
	Part No.	Part No.	Part No.	Part No.	Part No.	Part No.	Part No.
2 1/2	537-0810						
3	537-0812	537-1012	537-1212				
3 1/2	537-0814	537-1014		537-1414			
3 3/4			537-1215				
4	537-0816	537-1016			537-1616		
4 1/4				537-1417			
4 1/2	537-0818	537-1018	537-1218				
4 3/4					537-1619		
5	537-0820	537-1020	537-1220	537-1420			
5 1/2			537-1222	537-1422	537-1622		
6		537-1024	537-1224	537-1424		537-2024	
6 1/4					537-1625		
6 3/4						537-2027	537-2427
7			537-1228	537-1428	537-1628		
7 1/2						537-2030	537-2430
8			537-1232	537-1432	537-1632		
8 1/2						537-2034	537-2434
9				537-1436	537-1636		
9 1/2						537-2038	537-2438
10					537-1640		
10 1/2						537-2042	537-2442

BALL BEARING WASHER ASSEMBLY KIT

INCH

The **Condition 1** Washer Assembly parts include only the Stop Washer and Hex Screw. Either Condition 1 or 2 cages can be used with this assembly (ie 535-1210-**1**).

The **Condition 2 & 3** Washer Assembly parts include a Stop Washer, Spacer Bushing, Snap Ring, and Hex Screw. Only Condition 2 cages should be used with this assembly (ie 535-1211-**2**).

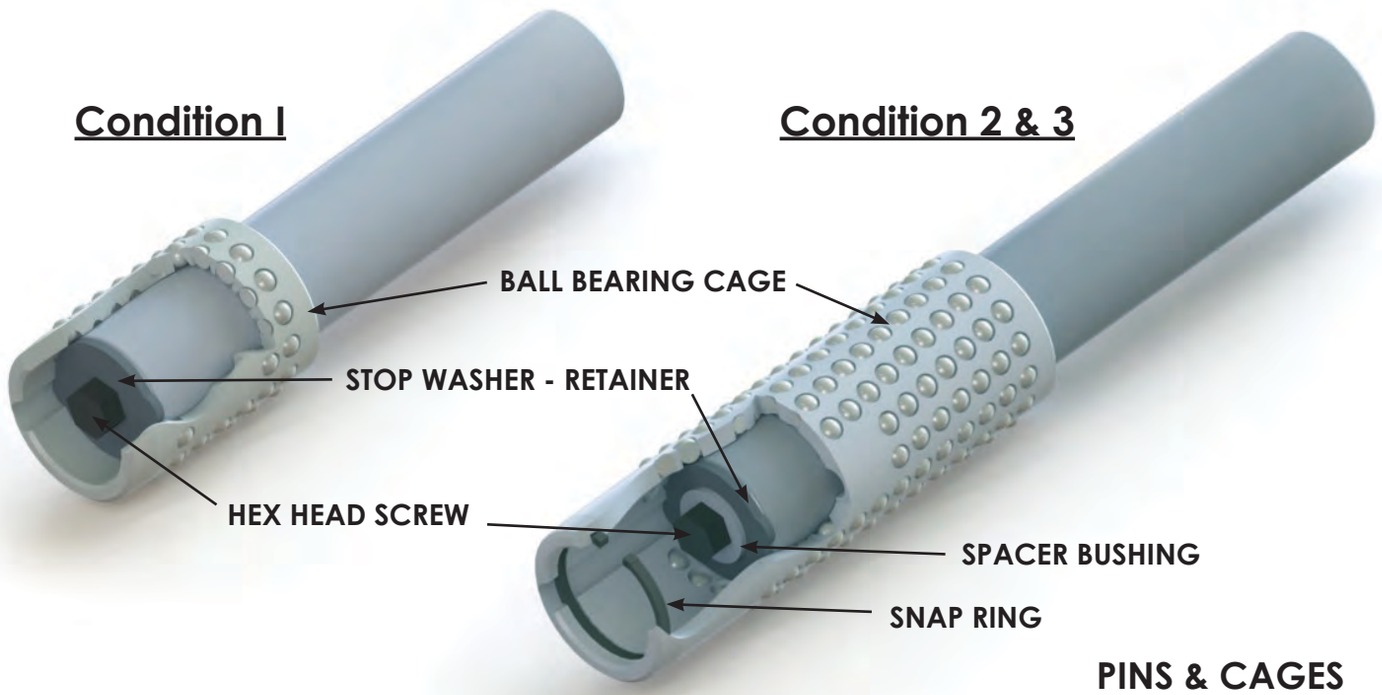

PINS & CAGES SOLD SEPARATELY

BALL BEARING WASHER ASSEMBLY KIT

Nominal Diameter	Washer Assembly Part Number		Stop Washer - Retainer		Bushing Stop Washer	Hex Head Screw	Snap Ring - Ball Bearing Cages
	Type 1	Type 2	Type 1	Type 2 and 3	Type 2 and 3	Type 1, 2, and 3	Type 2 and 3
1"	530-08KT-1	530-08KT-2	53W-0800-1	53W-0800-2	53B-0800	X0312C006	53R-0800
1 1/4"	530-10KT-1	530-10KT-2	53W-1000-1	53W-1000-2	53B-0800	X0312C006	53R-1000
1 1/2"	530-12KT-1	530-12KT-2	53W-1200-1	53W-1200-2	53B-1200	X0375C007	53R-1200
1 3/4"	530-14KT-1	530-14KT-2	53W-1400-1	53W-1400-2	53B-1200	X0375C007	53R-1400
2"	530-16KT-1	530-16KT-2	53W-1600-1	53W-1600-2	53B-1200	X0375C007	53R-1600
2 1/2"	530-20KT-1	530-20KT-2	53W-2000-1	53W-2000-2	53B-2400	X0500C010	53R-2000
3"	530-24KT-1	530-24KT-2	53W-2400-1	53W-2400-2	53B-2400	X0500C010	53R-2400

PLAIN-BEARING DEMOUNTABLE SHOULDER BUSHINGS LOW PROFILE

METRIC

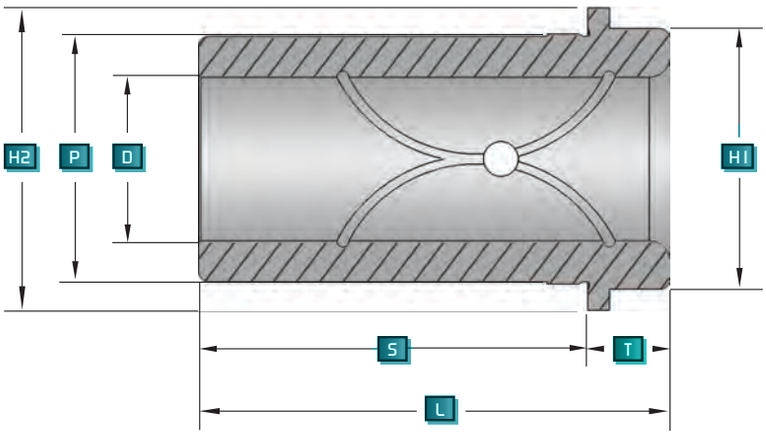

FOR T = LOW PROFILE ONLY			
D (nominal)	P (nominal)	H1	H2
18	28	28	32
19	28	28	32
24	38	36	47
25	38	36	47
30	45	43	54
32	45	43	54
38	54	48	63
40	54	48	63
48	65	64	75
50	65	64	75
63	81	79	93
80	100	99	115

WHEN ORDERING PLEASE SPECIFY:

1. Part Number
2. Quantity

PLAIN-BEARING DEMOUNTABLE SHOULDER BUSHINGS LOW PROFILE

T = LOW PROFILE				
Diameter	T	S	L	Part No.
18	10	18	28	611-18010
19	10	18	28	611-19010
24	10	23	33	611-24010
25	10	23	33	611-25010
30	10	30	40	611-30010
32	10	30	40	611-32010
38	14	38	52	611-38014
40	14	38	52	611-40014
48	14	48	62	611-48014
50	14	48	62	611-50014
63	14	61	75	611-63014
80	14	78	92	611-80014

PLAIN-BEARING DEMOUNTABLE SHOULDER BUSHINGS

METRIC

SHORT-MEDIUM-LONG

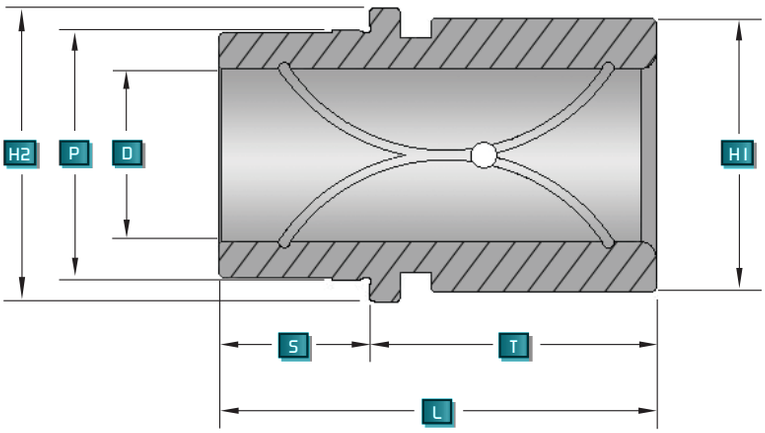

FOR T = SHORT, MEDIUM, LONG			
D (nominal)	P (nominal)	H1	H2
18	28	28	32
19	28	28	32
24	38	44	47
25	38	44	47
30	45	51	54
32	45	51	54
38	54	60	63
40	54	60	63
48	65	73	75
50	65	73	75
63	81	90	93
80	100	110	115

WHEN ORDERING PLEASE SPECIFY:

1. Part Number
2. Quantity

PLAIN-BEARING DEMOUNTABLE SHOULDER BUSHINGS

Diameter	T = SHORT				T = MEDIUM				T = LONG			
	T	S	L	Part No.	T	S	L	Part No.	T	S	L	Part No.
18	16	18	34	611-18016	32	18	50	611-18032	Upon Request			
19	16	18	34	611-19016	32	18	50	611-19032				
24	21	23	44	611-24021	47	23	70	611-24047	75	23	98	611-24075
25	21	23	44	611-25021	47	23	70	611-25047	75	23	98	611-25075
30	21	25	46	611-30021	50	25	75	611-30050	75	25	100	611-30075
32	21	25	46	611-32021	50	25	75	611-32050	75	25	100	611-32075
38	21	30	51	611-38021	50	30	80	611-38050	85	30	115	611-38085
40	21	30	51	611-40021	50	30	80	611-40050	85	30	115	611-40085
48	25	35	60	611-48025	50	35	85	611-48050	100	35	135	611-48100
50	25	35	60	611-50025	50	35	85	611-50050	100	35	135	611-50100
63	27	48	75	611-63027	52	48	100	611-63052	Upon Request			
80	27	48	75	611-80027	52	48	100	611-80052				

PLAIN-BEARING DEMOUNTABLE SHOULDER BUSHINGS LOW PROFILE BRONZE

METRIC

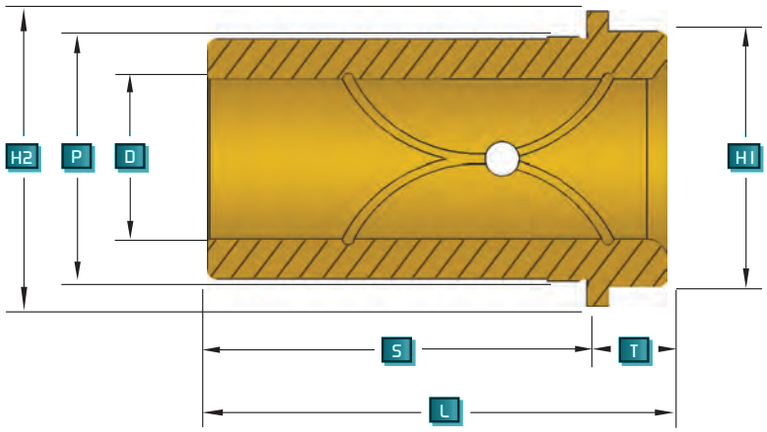

FOR T = LOW PROFILE ONLY			
D (nominal)	P (nominal)	H1	H2
18	28	28	32
19	28	28	32
24	38	36	47
25	38	36	47
30	45	43	54
32	45	43	54
38	54	48	63
40	54	48	63
48	65	64	75
50	65	64	75
63	81	79	93
80	100	99	115

WHEN ORDERING PLEASE SPECIFY:

1. Part Number
2. Quantity

PLAIN-BEARING DEMOUNTABLE SHOULDER BUSHINGS LOW PROFILE BRONZE

T = LOW PROFILE				
Diameter	T	S	L	Part No.
18	10	18	28	612-18010
19	10	18	28	612-19010
24	10	23	33	612-24010
25	10	23	33	612-25010
30	10	30	40	612-30010
32	10	30	40	612-32010
38	14	38	52	612-38014
40	14	38	52	612-40014
48	14	48	62	612-48014
50	14	48	62	612-50014
63	14	61	75	612-63014
80	14	78	92	612-80014

PLAIN-BEARING DEMOUNTABLE SHOULDER BUSHINGS BRONZE

METRIC

SHORT-MEDIUM-LONG

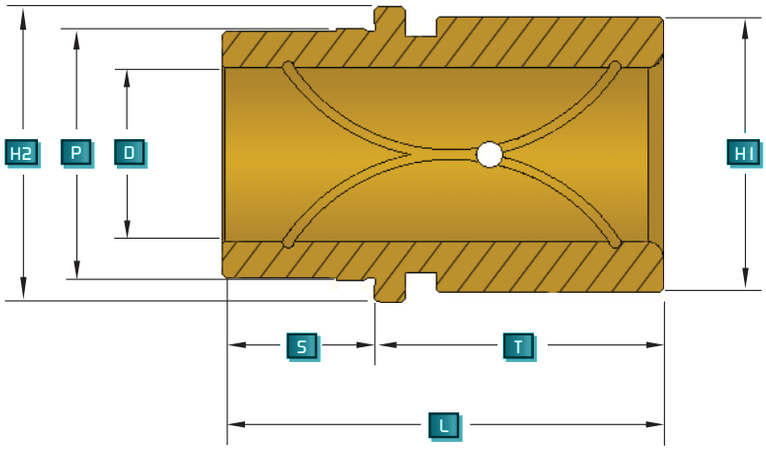

FOR T = SHORT, MEDIUM, LONG			
D (nominal)	P (nominal)	H1	H2
18	28	28	32
19	28	28	32
24	38	44	47
25	38	44	47
30	45	51	54
32	45	51	54
38	54	60	63
40	54	60	63
48	65	73	75
50	65	73	75
63	81	90	93
80	100	110	115

WHEN ORDERING PLEASE SPECIFY:

1. Part Number
2. Quantity

PLAIN-BEARING DEMOUNTABLE SHOULDER BUSHINGS BRONZE

Diameter	T = SHORT				T = MEDIUM				T = LONG			
	T	S	L	Part No.	T	S	L	Part No.	T	S	L	Part No.
18	16	18	34	612-18016	32	18	50	612-18032	Upon Request			
19	16	18	34	612-19016	32	18	50	612-19032				
24	21	23	44	612-24021	47	23	70	612-24047	75	23	98	612-24075
25	21	23	44	612-25021	47	23	70	612-25047	75	23	98	612-25075
30	21	25	46	612-30021	50	25	75	612-30050	75	25	100	612-30075
32	21	25	46	612-32021	50	25	75	612-32050	75	25	100	612-32075
38	21	30	51	612-38021	50	30	80	612-38050	85	30	115	612-38085
40	21	30	51	612-40021	50	30	80	612-40050	85	30	115	612-40085
48	25	35	60	612-48025	50	35	85	612-48050	100	35	135	612-48100
50	25	35	60	612-50025	50	35	85	612-50050	100	35	135	612-50100
63	27	48	75	612-63027	52	48	100	612-63052	Upon Request			
80	27	48	75	612-80027	52	48	100	612-80052				

PLAIN-BEARING PRESS FIT STRAIGHT PINS L=100-500

METRIC

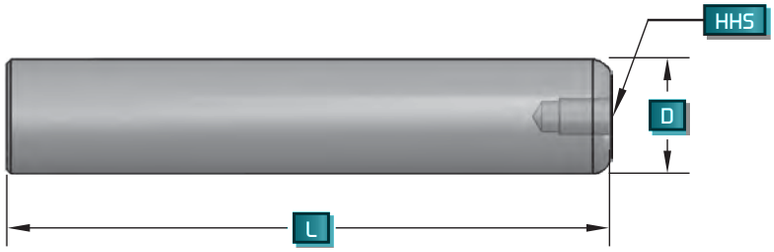

D (nominal)	HHS
18	-
19	-
24	-
25	M6x1.0
30	-
32	M6x1.0

WHEN ORDERING PLEASE SPECIFY:

1. Part Number
2. Quantity

PLAIN-BEARING PRESS FIT STRAIGHT PINS - DIAMETER 18-32

L	Dia = 18	Dia = 19	Dia = 24	Dia = 25	Dia = 30	Dia = 32
	Part No.	Part No.	Part No.	Part No.	Part No.	Part No.
100	621-18100	621-19100	621-24100	621-25100	621-30100	621-32100
110	621-18110	621-19110	621-24110	621-25110	621-30110	621-32110
120	621-18120	621-19120	621-24120	621-25120	621-30120	621-32120
130	621-18130	621-19130	621-24130	621-25130	621-30130	621-32130
140	621-18140	621-19140	621-24140	621-25140	621-30140	621-32140
150	621-18150	621-19150	621-24150	621-25150	621-30150	621-32150
160	621-18160	621-19160	621-24160	621-25160	621-30160	621-32160
170	621-18170	621-19170	621-24170	621-25170	621-30170	621-32170
180	621-18180	621-19180	621-24180	621-25180	621-30180	621-32180
190	621-18190	621-19190	621-24190	621-25190	621-30190	621-32190
200	621-18200	621-19200	621-24200	621-25200	621-30200	621-32200
220			621-24220	621-25220	621-30220	621-32220
240			621-24240	621-25240	621-30240	621-32240
260			621-24260	621-25260	621-30260	621-32260
280					621-30280	621-32280
300					621-30300	621-32300
320					621-30320	621-32320
360						
400						
450						
500						

PLAIN-BEARING PRESS FIT STRAIGHT PINS L=100-500

METRIC

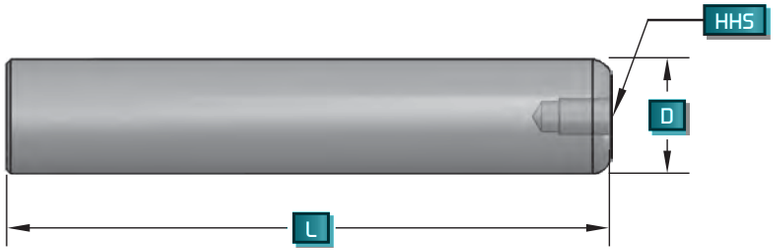

D (nominal)	HHS
38	-
40	M10x1.5
48	-
50	M10x1.5
63	M10x1.5
80	M10x1.5

WHEN ORDERING PLEASE SPECIFY:

1. Part Number
2. Quantity

PLAIN-BEARING PRESS FIT STRAIGHT PINS - DIAMETER 38-80

L	Dia = 38	Dia = 40	Dia = 48	Dia = 50	Dia = 63	Dia = 80
	Part No.	Part No.	Part No.	Part No.	Part No.	Part No.
100						
110	621-38110	621-40110				
120	621-38120	621-40120				
130	621-38130	621-40130	621-48130	621-50130		
140	621-38140	621-40140	621-48140	621-50140		
150	621-38150	621-40150	621-48150	621-50150		
160	621-38160	621-40160	621-48160	621-50160		
170	621-38170	621-40170	621-48170	621-50170		
180	621-38180	621-40180	621-48180	621-50180		
190	621-38190	621-40190	621-48190	621-50190		
200	621-38200	621-40200	621-48200	621-50200	621-63200	621-80200
220	621-38220	621-40220	621-48220	621-50220	621-63220	621-80220
240	621-38240	621-40240	621-48240	621-50240	621-63240	621-80240
260	621-38260	621-40260	621-48260	621-50260	621-63260	621-80260
280	621-38280	621-40280	621-48280	621-50280	621-63280	621-80280
300	621-38300	621-40300	621-48300	621-50300	621-63300	621-80300
320	621-38320	621-40320	621-48320	621-50320	621-63320	621-80320
360	621-38360	621-40360	621-48360	621-50360	621-63360	621-80360
400			621-48400	621-50400	621-63400	621-80400
450			621-48450	621-50450	621-63450	621-80450
500					621-63500	621-80500

PLAIN-BEARING DEMOUNTABLE PINS L=80-170

METRIC

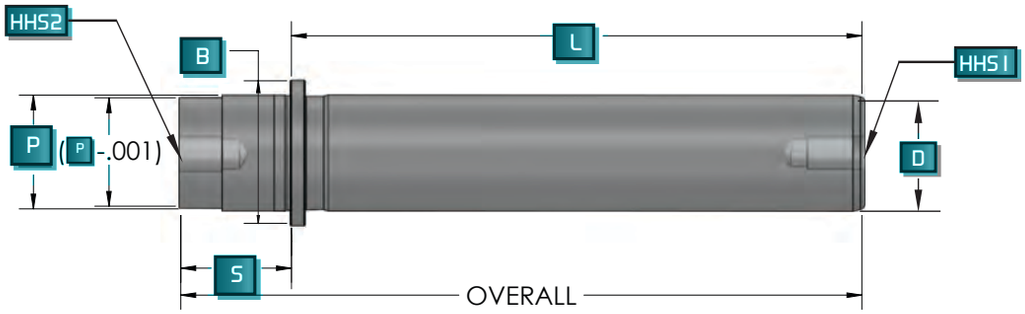

D (nominal)	P (nominal)	B	S	HHS1	HHS2
18	18	25.6	20	-	M5x0.8
19	19	25.6	20	-	M5x0.8
24	24	32.6	24	-	M6x1.0
25	25	32.6	24	M6x1.0	M6x1.0
30	30	40.6	30	-	M6x1.0
32	32	40.6	30	M6x1.0	M6x1.0

WHEN ORDERING PLEASE SPECIFY:

1. Part Number
2. Quantity

Hardened to 60 +/- 2 Rc

PLAIN-BEARING DEMOUNTABLE PINS - DIAMETER 18-32

L	Dia = 18	Dia = 19	Dia = 24	Dia = 25	Dia = 30	Dia = 32
	Part No.	Part No.	Part No.	Part No.	Part No.	Part No.
80	622-18080	622-19080	622-24080	622-25080		
90	622-18090	622-19090	622-24090	622-25090		
100	622-18100	622-19100	622-24100	622-25100	622-30100	622-32100
110	622-18110	622-19110	622-24110	622-25110	622-30110	622-32110
120	622-18120	622-19120	622-24120	622-25120	622-30120	622-32120
130			622-24130	622-25130	622-30130	622-32130
140	622-18140	622-19140	622-24140	622-25140	622-30140	622-32140
150			622-24150	622-25150	622-30150	622-32150
160	622-18160	622-19160	622-24160	622-25160	622-30160	622-32160
170			622-24170	622-25170	622-30170	622-32170

PLAIN-BEARING DEMOUNTABLE PINS L=80-170

METRIC

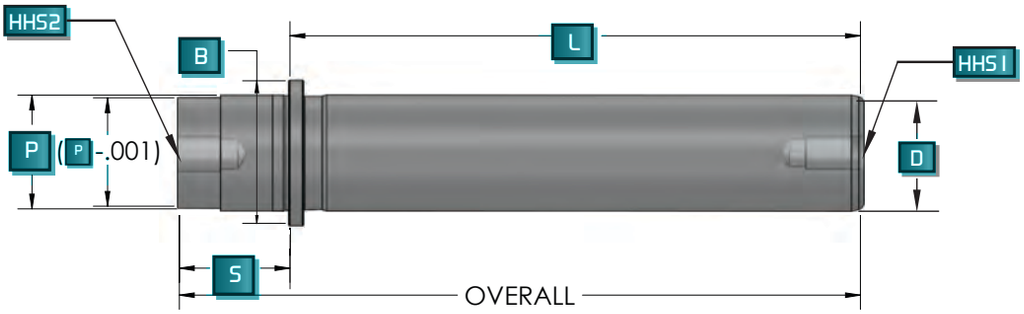

D (nominal)	P (nominal)	B	S	HHS1	HHS2
38	38	50.8	37	-	M10x1.5
40	40	50.8	37	M10x1.5	M10x1.5
48	48	63.8	45	-	M12x1.75
50	50	63.8	45	M10x1.5	M12x1.75
63	63	76.0	49	M10x1.5	M16x2.0
80	80	93.0	60	M10x1.5	M16x2.0

WHEN ORDERING PLEASE SPECIFY:

1. Part Number
2. Quantity

Hardened to 60 +/- 2 Rc

PLAIN-BEARING DEMOUNTABLE PINS - DIAMETER 38-80

L	Dia = 38	Dia = 40	Dia = 48	Dia = 50	Dia = 63	Dia = 80
	Part No.	Part No.	Part No.	Part No.	Part No.	Part No.
80						
90						
100						
110	622-38110	622-40110	622-48110	622-50110		
120	622-38120	622-40120	622-48120	622-50120	622-63120	622-80120
130	622-38130	622-40130	622-48130	622-50130		
140	622-38140	622-40140	622-48140	622-50140	622-63140	622-80140
150	622-38150	622-40150	622-48150	622-50150		
160	622-38160	622-40160	622-48160	622-50160	622-63160	622-80160
170	622-38170	622-40170	622-48170	622-50170		

PLAIN-BEARING DEMOUNTABLE PINS L=170-400

METRIC

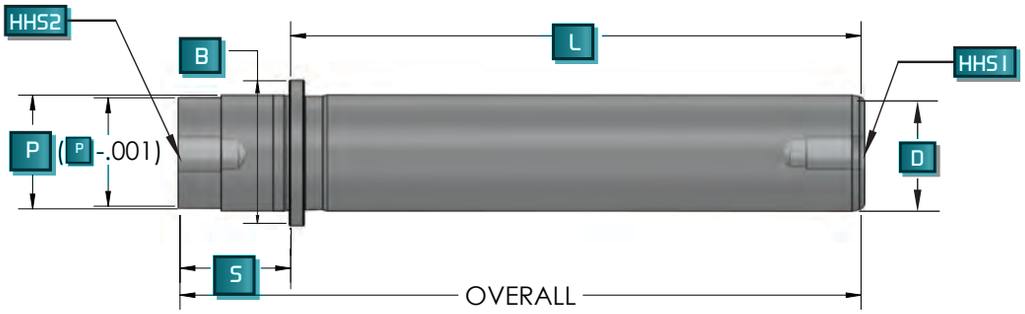

D (nominal)	P (nominal)	B	S	HHS1	HHS2
18	18	25.6	20	-	M5x0.8
19	19	25.6	20	-	M5x0.8
24	24	32.6	24	-	M6x1.0
25	25	32.6	24	M6x1.0	M6x1.0
30	30	40.6	30	-	M6x1.0
32	32	40.6	30	M6x1.0	M6x1.0

WHEN ORDERING PLEASE SPECIFY:

1. Part Number
2. Quantity

Hardened to 60 +/- 2 Rc

PLAIN-BEARING DEMOUNTABLE PINS - DIAMETER 18-32

L	Dia = 18	Dia = 19	Dia = 24	Dia = 25	Dia = 30	Dia = 32
	Part No.	Part No.	Part No.	Part No.	Part No.	Part No.
170			622-24170	622-25170	622-30170	622-32170
180			622-24180	622-25180	622-30180	622-32180
190			622-24190	622-25190	622-30190	622-32190
200			622-24200	622-25200	622-30200	622-32200
220					622-30220	622-32220
240					622-30240	622-32240
280					622-30280	622-32280
320						
360						
400						

PLAIN-BEARING DEMOUNTABLE PINS L=170-400

METRIC

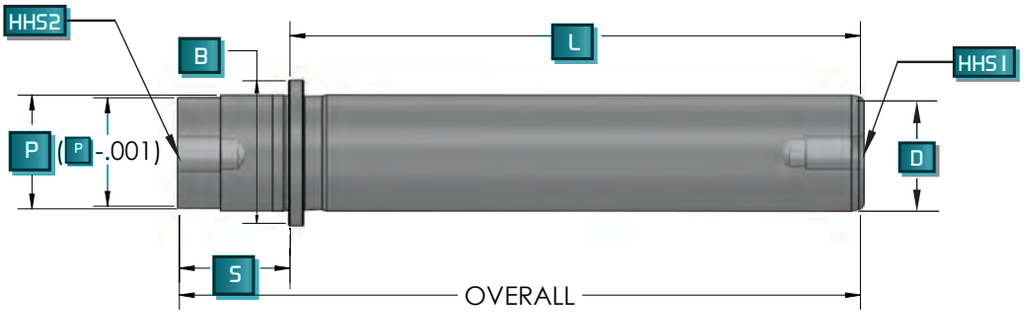

D (nominal)	P (nominal)	B	S	HHS1	HHS2
38	38	50.8	37	-	M10x1.5
40	40	50.8	37	M10x1.5	M10x1.5
48	48	63.8	45	-	M12x1.75
50	50	63.8	45	M10x1.5	M12x1.75
63	63	76.0	49	M10x1.5	M16x2.0
80	80	93.0	60	M10x1.5	M16x2.0

WHEN ORDERING PLEASE SPECIFY:

1. Part Number
2. Quantity

Hardened to 60 +/- 2 Rc

PLAIN-BEARING DEMOUNTABLE PINS - DIAMETER 38-80

L	Dia = 38	Dia = 40	Dia = 48	Dia = 50	Dia = 63	Dia = 80
	Part No.	Part No.	Part No.	Part No.	Part No.	Part No.
170	622-38170	622-40170	622-48170	622-50170		
180	622-38180	622-40180	622-48180	622-50180	622-63180	622-80180
190	622-38190	622-40190	622-48190	622-50190		
200	622-38200	622-40200	622-48200	622-50200	622-63200	622-80200
220	622-38220	622-40220	622-48220	622-50220	622-63220	622-80220
240	622-38240	622-40240	622-48240	622-50240	622-63240	622-80240
280	622-38280	622-40280	622-48280	622-50280	622-63280	622-80280
320			622-48320	622-50320	622-63320	622-80320
360			622-48360	622-50360	622-63360	622-80360
400			622-48400	622-50400	622-63400	622-80400

BALL BEARING PRESS FIT STRAIGHT PINS L=100-200

METRIC

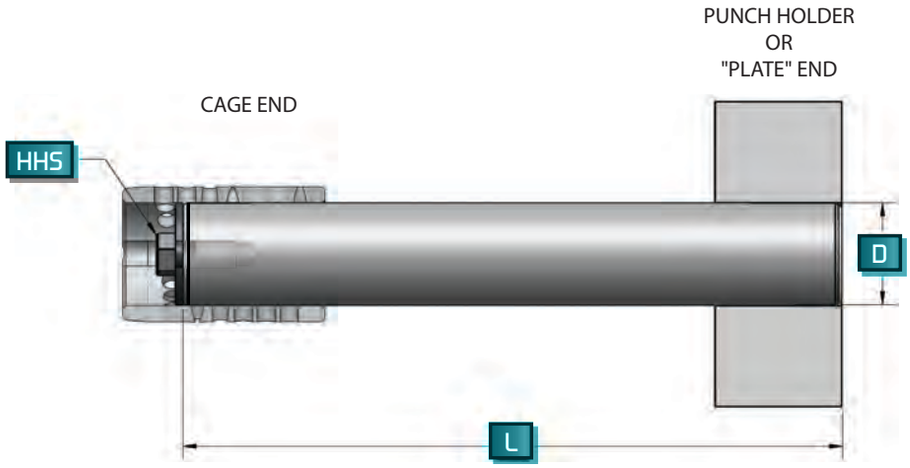

D (nominal)	HHS
25	M6x1.0
32	M6x1.0
40	M10x1.5
50	M10x1.5
63	M10x1.5
80	M10x1.5

WHEN ORDERING PLEASE SPECIFY:

1. Part Number
2. Quantity

Hardened to 60 +/- 2 Rc

BALL BEARING PRESS FIT STRAIGHT PINS - LENGTH 100-200

L	Dia = 25	Dia = 32	Dia = 40	Dia = 50	Dia = 63	Dia = 80
	Part No.	Part No.	Part No.	Part No.	Part No.	Part No.
100	631-25100	631-32100				
110	631-25110	631-32110	631-40110			
120	631-25120	631-32120	631-40120			
130	631-25130	631-32130	631-40130	631-50130		
140	631-25140	631-32140	631-40140	631-50140		
150	631-25150	631-32150	631-40150	631-50150		
160	631-25160	631-32160	631-40160	631-50160		
170	631-25170	631-32170	631-40170	631-50170		
180	631-25180	631-32180	631-40180	631-50180		
190	631-25190	631-32190	631-40190	631-50190		
200	631-25200	631-32200	631-40200	631-50200	631-63200	631-80200

BALL BEARING PRESS FIT STRAIGHT PINS L=220-500

METRIC

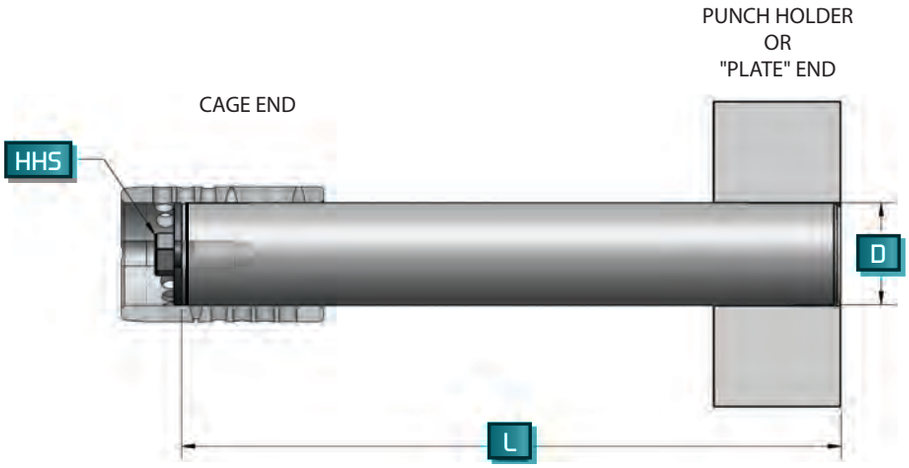

D (nominal)	HHS
25	M6x1.0
32	M6x1.0
40	M10x1.5
50	M10x1.5
63	M10x1.5
80	M10x1.5

WHEN ORDERING PLEASE SPECIFY:

1. Part Number
2. Quantity

Hardened to 60 +/- 2 Rc

BALL BEARING PRESS FIT STRAIGHT PINS - LENGTH 220-500

L	Dia = 25	Dia = 32	Dia = 40	Dia = 50	Dia = 63	Dia = 80
	Part No.	Part No.	Part No.	Part No.	Part No.	Part No.
220	631-25220	631-32220	631-40220	631-50220	631-63220	631-80220
240	631-25240	631-32240	631-40240	631-50240	631-63240	631-80240
260	631-25260	631-32260	631-40260	631-50260	631-63260	631-80260
280		631-32280	631-40280	631-50280	631-63280	631-80280
300		631-32300	631-40300	631-50300	631-63300	631-80300
320		631-32320	631-40320	631-50320	631-63320	631-80320
360			631-40360	631-50360	631-63360	631-80360
400				631-50400	631-63400	631-80400
450				631-50450	631-63450	631-80450
500					631-63500	631-80500

BALL BEARING DEMOUNTABLE PINS L=80-170

METRIC

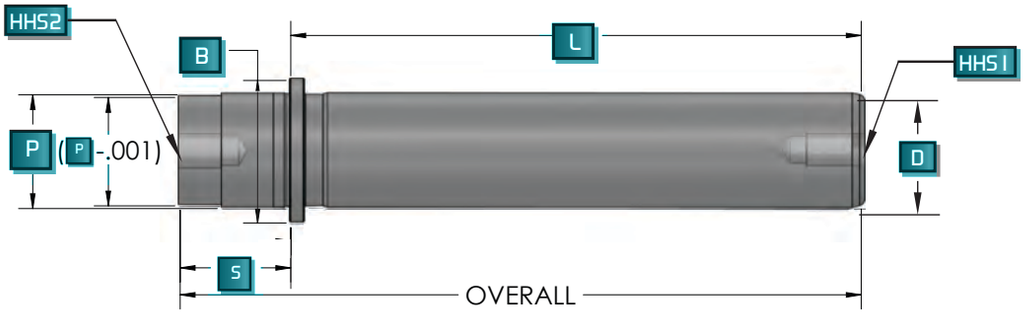

D (nominal)	P (nominal)	B	S	HHS1	HHS2
25	25	33	24	M6x1.0	M6x1.0
32	32	41	30	M6x1.0	M6x1.0
40	40	51	37	M10x1.5	M10x1.5
50	50	64	45	M10x1.5	M12x1.75
63	63	76	49	M10x1.5	M16x2.0
80	80	93	60	M10x1.5	M16x2.0

WHEN ORDERING PLEASE SPECIFY:

1. Part Number
2. Quantity

Hardened to 60 +/- 2 Rc

BALL BEARING DEMOUNTABLE PINS - LENGTH 80-170

L	Dia = 25	Dia = 32	Dia = 40	Dia = 50	Dia = 63	Dia = 80
	Part No.	Part No.	Part No.	Part No.	Part No.	Part No.
80	632-25080					
90	632-25090					
100	632-25100	632-32100				
110	632-25110	632-32110	632-40110	632-50110		
120	632-25120	632-32120	632-40120	632-50120	632-63120	632-80120
130	632-25130	632-32130	632-40130	632-50130		
140	632-25140	632-32140	632-40140	632-50140	632-63140	632-80140
150	632-25150	632-32150	632-40150	632-50150		
160	632-25160	632-32160	632-40160	632-50160	632-63160	632-80160
170	632-25170	632-32170	632-40170	632-50170		

BALL BEARING DEMOUNTABLE PINS L=180-400

METRIC

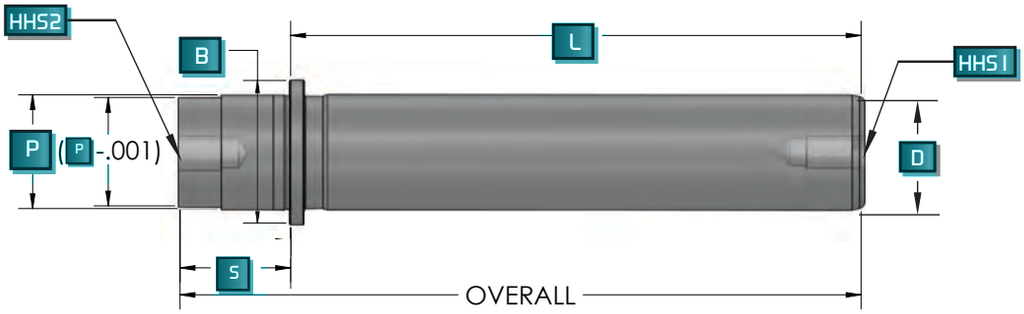

D (nominal)	P (nominal)	B	S	HHS1	HHS2
25	25	33	24	M6x1.0	M6x1.0
32	32	41	30	M6x1.0	M6x1.0
40	40	51	37	M10x1.5	M10x1.5
50	50	64	45	M10x1.5	M12x1.75
63	63	76	49	M10x1.5	M16x2.0
80	80	93	60	M10x1.5	M16x2.0

WHEN ORDERING PLEASE SPECIFY:

1. Part Number
2. Quantity

Hardened to 60 +/- 2 Rc

BALL BEARING DEMOUNTABLE PINS - LENGTH 180-400

L	Dia = 25	Dia = 32	Dia = 40	Dia = 50	Dia = 63	Dia = 80
	Part No.	Part No.	Part No.	Part No.	Part No.	Part No.
180	632-25180	632-32180	632-40180	632-50180	632-63180	632-80180
190	632-25190	632-32190	632-40190	632-50190		
200	632-25200	632-32200	632-40200	632-50200	632-63200	632-80200
220		632-32220	632-40220	632-50220	632-63220	632-80220
240		632-32240	632-40240	632-50240	632-63240	632-80240
280		632-32280	632-40280	632-50280	632-63280	632-80280
320				632-50320	632-63320	632-80320
360				632-50360	632-63360	632-80360
400				632-50400	632-63400	632-80400

BALL BEARING CAGES

METRIC

WHEN ORDERING PLEASE SPECIFY:

1. Part Number
2. Quantity

Note:

1. 4mm ball dia. Pin dia. 25mm ≤ 40mm
2. 6mm ball dia. Pin dia. ≥ 50mm

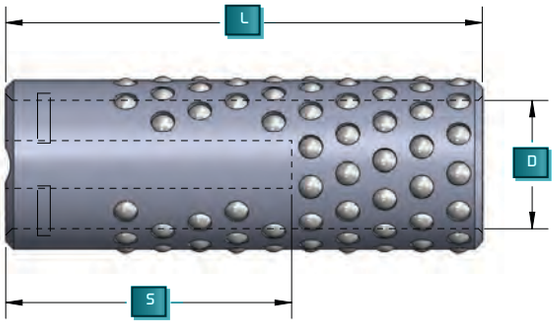

BALL BEARING CAGES - DIAMETER 25-40

Diameter	L	S	Ball Dia	Part No.
25	36	11,5	4	635-25036-1
25	48	17,5	4	635-25048-1
25	55	31	4	635-25055-2
25	70	40	4	635-25070-2
25	90	47	4	635-25090-2
25	100	55	4	635-25100-2
25	110	65	4	635-25110-2
32	36	11,5	4	635-32036-1
32	48	17,5	4	635-32048-1
32	70	40	4	635-32070-2
32	90	47	4	635-32090-2
32	105	55	4	635-32105-2
32	115	65	4	635-32115-2
32	125	75	4	635-32125-2
32	135	85	4	635-32135-2
40	48	17,5	4	635-40048-1
40	60	23,5	4	635-40060-1
40	70	40	4	635-40070-2
40	85	48	4	635-40085-2
40	105	56	4	635-40105-2
40	115	66	4	635-40115-2
40	125	76	4	635-40125-2
40	135	86	4	635-40135-2
40	145	96	4	635-40145-2
40	155	107	4	635-40155-2

BALL BEARING CAGES - DIAMETER 50-80

Diameter	L	S	Ball Dia	Part No.
50	70	28	6	635-50070-1
50	84	35	6	635-50084-1
50	105	56	6	635-50105-2
50	120	65	6	635-50120-2
50	140	76	6	635-50140-2
50	150	86	6	635-50150-2
50	160	96	6	635-50160-2
50	170	108	6	635-50170-2
50	185	121	6	635-50185-2
50	195	133	6	635-50195-2
63	98	42	6	635-63098-1
63	145	76	6	635-63145-2
63	165	86	6	635-63165-2
63	180	96	6	635-63180-2
63	190	107	6	635-63190-2
63	205	121	6	635-63205-2
63	215	132	6	635-63215-2
80	98	42	6	635-80098-1
80	145	76	6	635-80145-2
80	165	86	6	635-80165-2
80	180	96	6	635-80180-2
80	190	107	6	635-80190-2
80	205	121	6	635-80205-2
80	215	132	6	635-80215-2

BALL BEARING DEMOUNTABLE SHOULDER BUSHINGS

METRIC

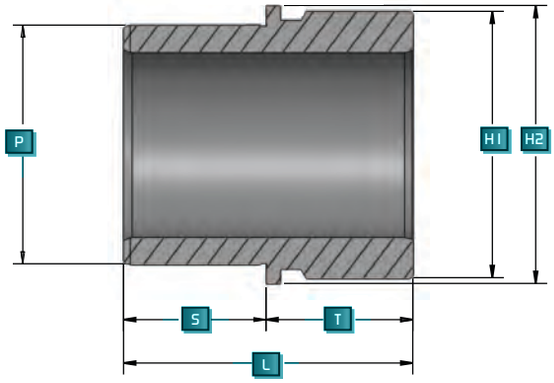

Diameter	P (nominal)	S	H1	H2
25	45	30	50,8	55,1
32	54	30	55,9	64,0
40	65	30	73,2	77,0
50	81	50	88,6	95,0
63	95	50	103,9	109,0
80	108	61	114,3	125,0

WHEN ORDERING PLEASE SPECIFY:

1. Part Number
2. Quantity

Hardened to 60 +/- 2 Rc

BALL BEARING DEMOUNTABLE SHOULDER BUSHINGS

Diameter	T = 35		T = 50		T = 60		T = 65		T = 80	
	L	Part No.	L	Part No.	L	Part No.	L	Part No.	L	Part No.
25	65	636-25035	80	636-25050			95	636-25065		
32			80	636-32050			95	636-32065	110	636-32080
40			80	636-40050			95	636-40065	110	636-40080
50					110	636-50060			130	636-50080
63										

BALL BEARING DEMOUNTABLE SHOULDER BUSHINGS

Diameter	T = 100		T = 117		T = 120		T = 140	
	L	Part No.	L	Part No.	L	Part No.	L	Part No.
25								
32								
40	130	636-40100						
50	150	636-50100			170	636-50120		
63	150	636-63100			170	636-63120	190	636-63140
80	161	636-80100	178	636-80117			201	636-80140

BALL BEARING SLEEVE BUSHINGS

METRIC

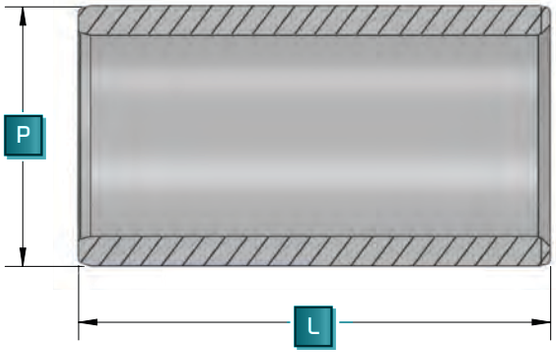

Diameter	P (nominal)
25	45
32	54
40	65
50	81
63	95
80	112

WHEN ORDERING PLEASE SPECIFY:

1. Part Number
2. Quantity

Hardened to 60 +/- 2 Rc

BALL BEARING SLEEVE BUSHINGS

L	Dia = 25	Dia = 32	Dia = 40	Dia = 50	Dia = 63	Dia = 80
	Part No.	Part No.	Part No.	Part No.	Part No.	Part No.
65	637-25065					
80	637-25080	637-32080	637-40080			
95	637-25095	637-32095	637-40095			
110	637-25110	637-32110	637-40110	637-50110		
130	637-25130	637-32130	637-40130	637-50130		
150		637-32150	637-40150	637-50150	637-63150	637-80150
170		637-32170	637-40170	637-50170	637-63170	637-80170
190			637-40190	637-50190	637-63190	637-80190
215			637-40215	637-50215	637-63215	637-80215
240				637-50240	637-63240	637-80240
265				637-50265	637-63265	637-80265

BALL BEARING WASHER ASSEMBLY KIT

METRIC

The **Condition 1** Washer Assembly parts include only the Stop Washer and Hex Screw. Either Condition 1 or 2 cages can be used with this assembly (ie 635-40048-**1**).

The **Condition 2 & 3** Washer Assembly parts include a Stop Washer, Spacer Bushing, Snap Ring, and Hex Screw. Only Condition 2 cages should be used with this assembly (ie 635-40115-**2**).

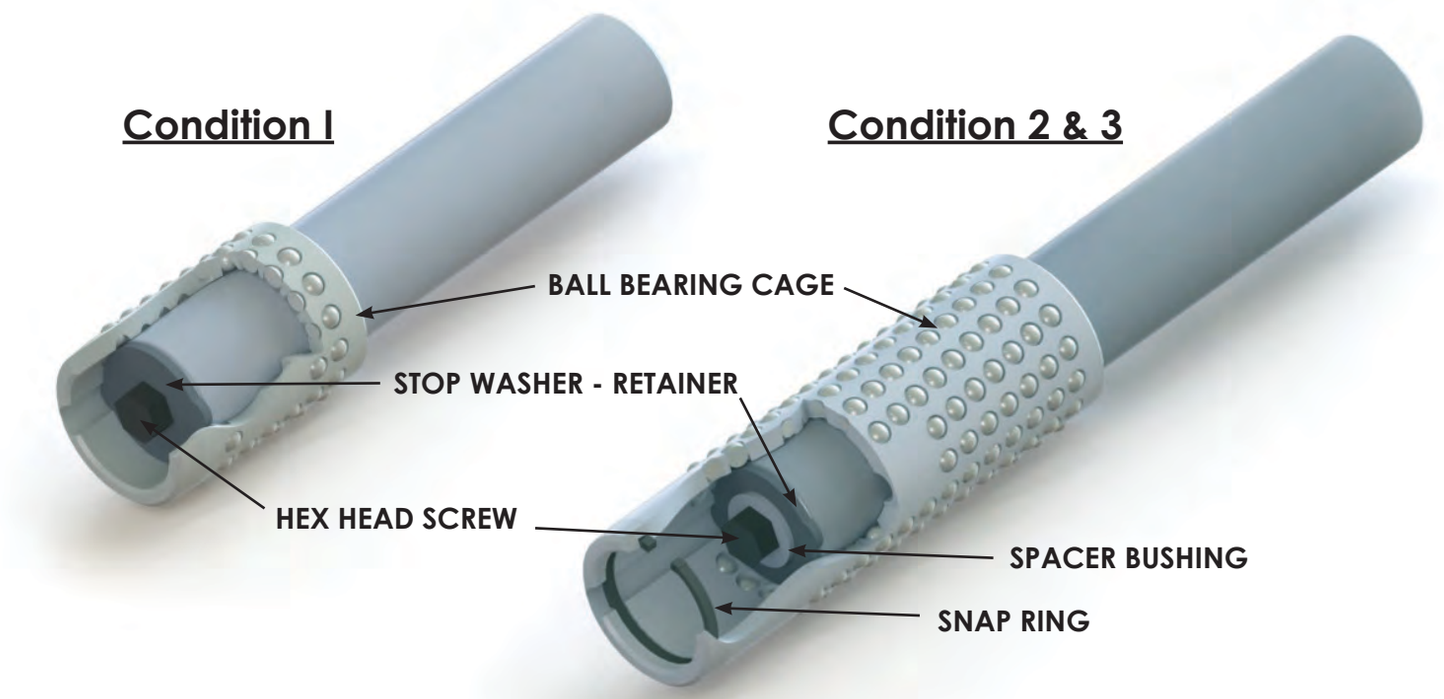

PINS & CAGES SOLD SEPARATELY

BALL BEARING WASHER ASSEMBLY KIT

Nominal Diameter	Washer Assembly Part Number		Stop Washer - Retainer		Bushing Stop Washer	Hex Head Screw	Snap Ring - Ball Bearing Cages
	Type 1	Type 2	Type 1	Type 2 and 3	Type 2 and 3	Type 1, 2, and 3	Type 2 and 3
25	630-25KT-1	630-25KT-2	63W-25000-1	63W-25000-2	63B-25000	SM6C020	63R-25000
32	630-32KT-1	630-32KT-2	63W-32000-1	63W-32000-2	63B-25000	SM6C020	63R-32000
40	630-40KT-1	630-40KT-2	63W-40000-1	63W-40000-2	63B-40000	SM10C025	63R-40000
50	630-50KT-1	630-50KT-2	63W-50000-1	63W-50000-2	63B-40000	SM10C025	63R-50000
63	630-63KT-1	630-63KT-2	63W-63000-1	63W-63000-2	63B-40000	SM10C025	63R-63000
80	630-80KT-1	630-80KT-2	63W-80000-1	63W-80000-2	63B-40000	SM10C025	63R-80000

PIN CLAMP ORIENTATIONS

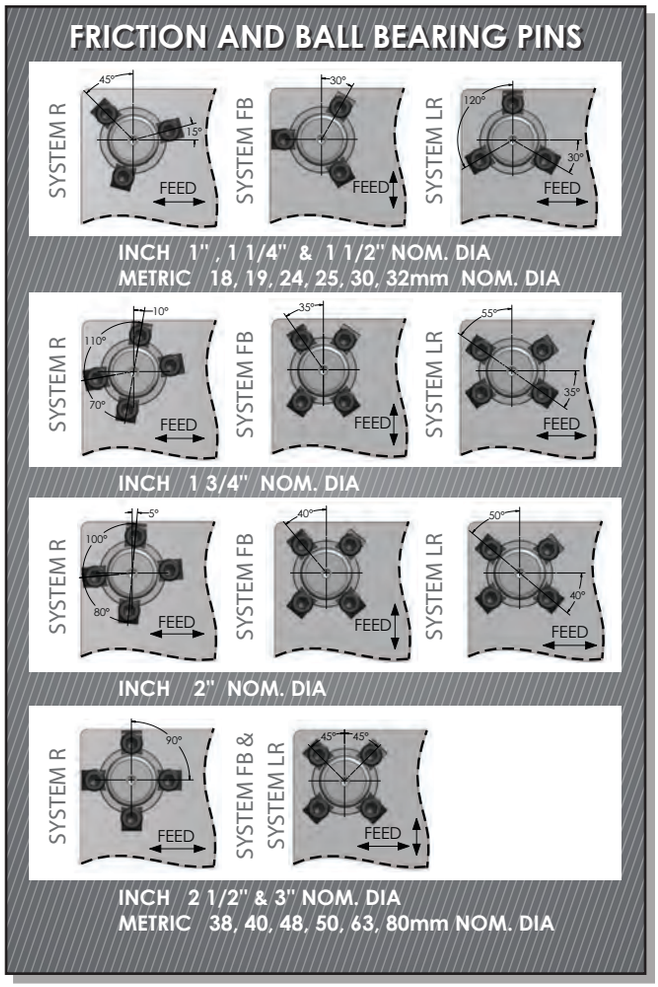

WHEN ORDERING PLEASE SPECIFY:
1. Clamp Part Number, Chart On Page 7910
2. Quantity

CLAMPS

Clamps are available in three styles. See chart for specific die set component application. All slip fit demountable guide pins or bushings are supplied with clamps and screws.

CLAMP LOCATION SYSTEMS

Three pin and bushing clamp location systems are available for Superior die sets. The LR, FB and R systems allow for various material feeding directions and should be considered when ordering any die set. Special pin and bushing clamp configurations are available as an option.

BUSHING CLAMP ORIENTATIONS

FRICTION BUSHING

INCH 3/4" TO 1" NOM. DIA SHORT-MED-LONG
METRIC 18, 19, 24, 25mm NOM. DIA SHORT-MED-LONG
METRIC 18, 19mm NOM. DIA LOW PROFILE

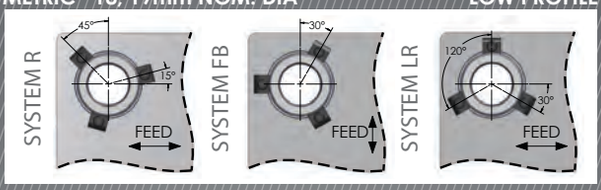

INCH 1 1/4" TO 1 1/2" NOM. DIA SHORT-MED-LONG
INCH 1" TO 1 1/2" STEEL/BRONZE/BRONZE RITE LOW PROFILE
INCH ALL DIAMETER - SELF LUBRICATING LOW PROFILE
METRIC 30, 32, 38, 40mm NOM. DIA SHORT-MED-LONG
METRIC 24, 25, 30, 32mm NOM. DIA LOW PROFILE

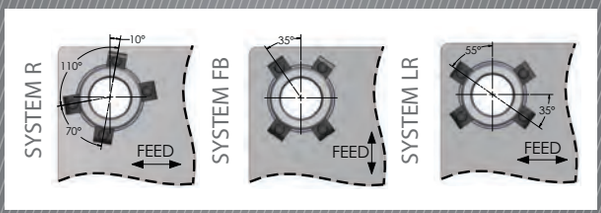

INCH 1 3/4" TO 2" NOM. DIA SHORT-MED-LONG
INCH 1 3/4" TO 2" NOM. DIA STEEL/BRONZE/BRONZE RITE LOW PROFILE

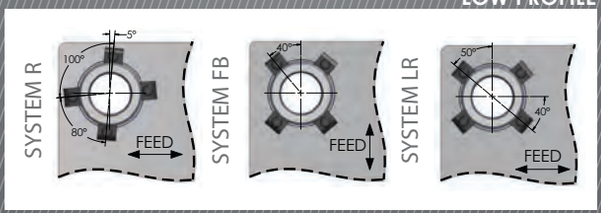

INCH 2' 1/2" NOM. DIA SHORT-MED-LONG
INCH 2' 1/2" NOM. DIA STEEL/BRONZE/BRONZE RITE LOW PROFILE

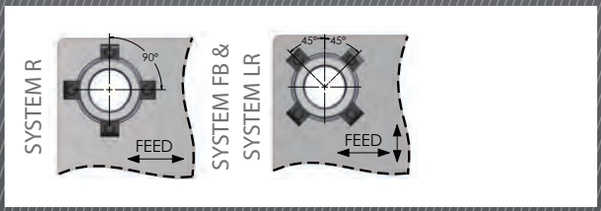

INCH 3" TO 4" NOM. DIA SHORT-MED-LONG
METRIC 48, 50, 63, 80mm NOM. DIA SHORT-MED-LONG
METRIC 38, 40, 48, 50, 63, 80mm NOM. DIA LOW PROFILE

BALL BEARING BUSHING

METRIC 18, 19, 24, 25mm NOM. DIA
METRIC 18, 19mm NOM. DIA

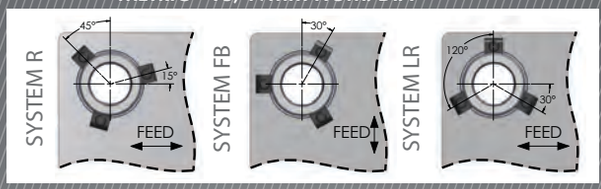

INCH 1" & 1 1/4" NOM. DIA
METRIC 30, 32, 38, 40mm NOM. DIA
METRIC 24, 25, 30, 32mm NOM. DIA

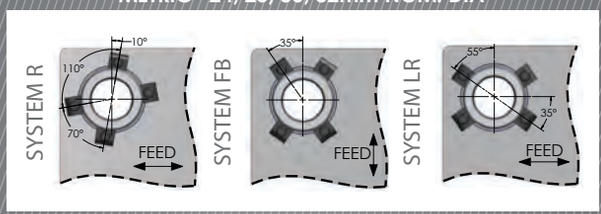

INCH 1 1/2" TO 2" NOM. DIA

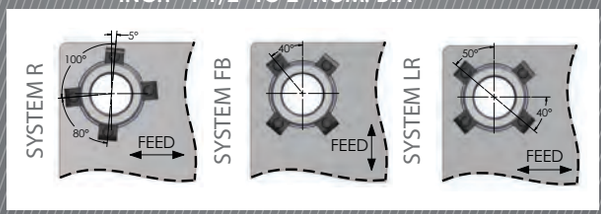

INCH 2 1/2" NOM. DIA

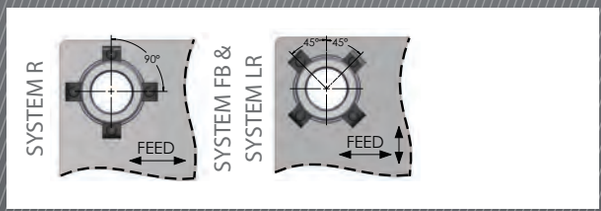

INCH 3" NOM. DIA
METRIC 48, 50, 63, 80mm NOM. DIA
METRIC 38, 40, 48, 50, 63, 80mm NOM. DIA

WHEN ORDERING PLEASE SPECIFY:

1. Clamp Part Number, Chart On Page 7910
2. Quantity

CLAMP TYPES

INCH

FRICTION - INCH

TYPE D BUSHING

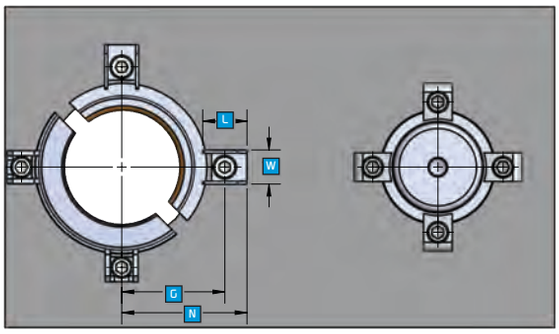

TYPE D PIN

BUSHING CLAMP

PART NO.
C-DX 3/4-7/8"
C-S 1" & up

BUSHING CLAMP

PART NO.
C-DX 1"-1 1/4"
C-DNI 1 1/2 -2 1/2"

PIN CLAMP

PART NO.
C-S (7/8"-1" Dia. only)
C-DL (1 1/4" Dia. & up)

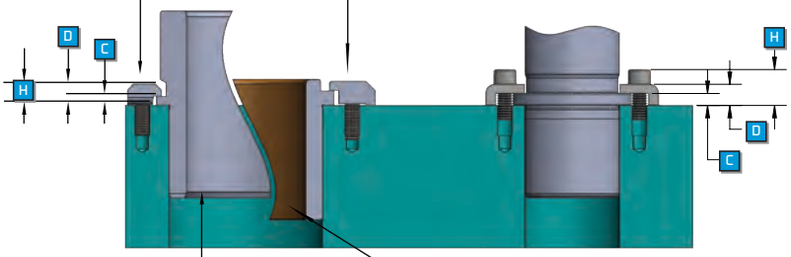

SHORT-MED-LONG SHOULDER

LOW-PROFILE SHOULDER (BRONZE-RITE™)

BALL BEARING - INCH

TYPE D BUSHING

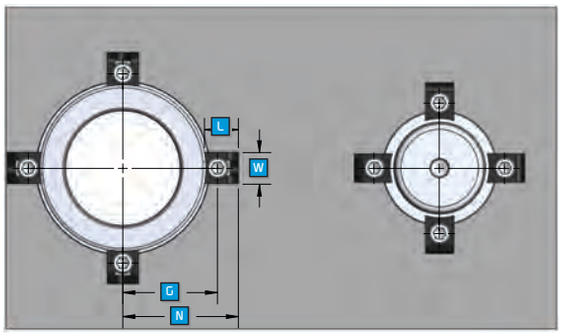

TYPE D PIN

BUSHING CLAMP

PART NO.
C-S
(All Dia.)

PIN CLAMP

PART NO.
C-S (1" Dia. only)
C-DL (1 1/4" Dia. & up)

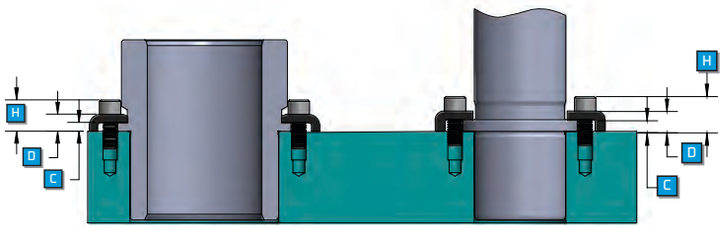

CLAMP TYPES

METRIC

FRICTION - METRIC

TYPE D BUSHING **TYPE D PIN**

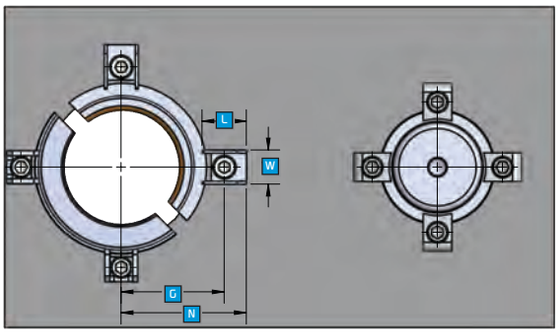

BUSHING CLAMP

PART NO.
C-DX 18/19 mm
C-S 24 mm & up

BUSHING CLAMP

PART NO.
C-DX 18/19 mm
C-DNM-96 24mm-32mm
C-DNM-97 38mm-80mm

PIN CLAMP

PART NO.
C-DX (18/19 mm Dia. only)
C-S (24/25 mm Dia. only)
C-DL (30 mm Dia. & up)

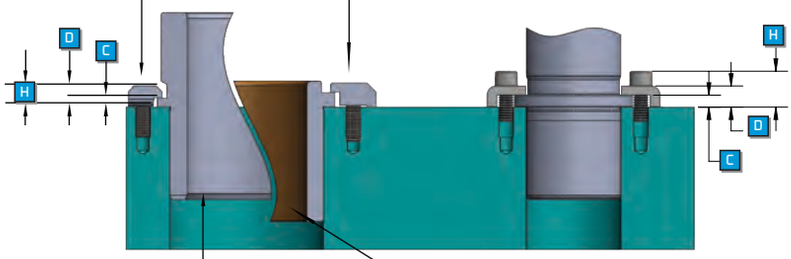

SHORT-MED-LONG SHOULDER

LOW-PROFILE SHOULDER (BRONZE-RITE™)

BALL BEARING - METRIC

TYPE D BUSHING **TYPE D PIN**

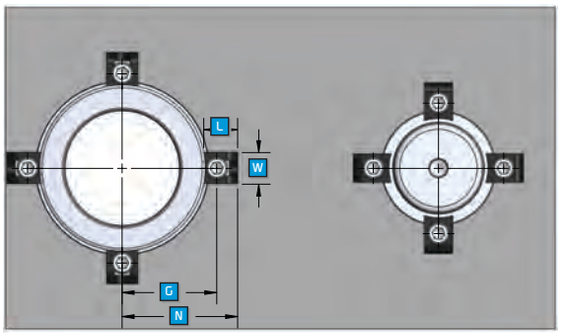

BUSHING CLAMP

PART NO.
C-S
(All Dia.)

PIN CLAMP

PART NO.
C-DX (18/19 mm Dia. only)
C-S (24/25 mm Dia. only)
C-DL (30 mm Dia. & up)

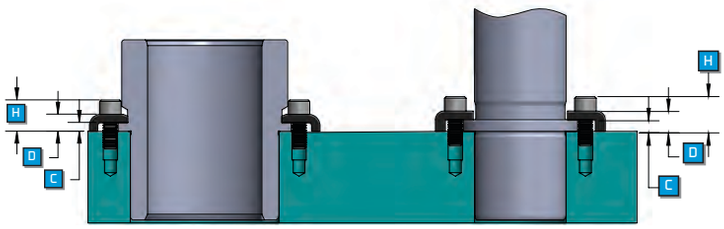

PIN & BUSHING CLAMP LOCATIONS INCH

CLAMP DIMENSIONS

COMPONENT	NOM. DIA / BUSH I.D. PIN O.D.	LOCATION		SIZE					CLAMP NO.	QTY	SCREW SIZE	BORING SIZE FOR PIN OR BUSHING +.0005/-.0000
		G	N	L	W	C	D	H				
BUSHINGS: DEMOUNTABLE SHORT-MED-LONG SHOULDER ALL MATERIAL	3/4	0.791	1.025	0.469	0.500	0.125	0.219	0.469	C-DX	2	1/4"-20 x 5/8"	1.1250
	7/8	0.916	1.150	0.469	0.500	0.125	0.219	0.469	C-DX	2	1/4"-20 x 5/8"	1.3750
	1	1.175	1.560	0.745	0.688	0.188	0.370	0.688	C-S	2	5/16"-18 x 3/4"	1.5000
	1 1/4	1.300	1.685	0.745	0.688	0.188	0.370	0.688	C-S	3	5/16"-18 x 3/4"	1.7500
	1 1/2	1.425	1.810	0.745	0.688	0.188	0.370	0.688	C-S	3	5/16"-18 x 3/4"	2.0000
	1 3/4	1.580	1.965	0.745	0.688	0.188	0.370	0.688	C-S	4	5/16"-18 x 3/4"	2.2500
	2	1.780	2.165	0.745	0.688	0.188	0.370	0.688	C-S	4	5/16"-18 x 3/4"	2.5000
	2 1/2	2.135	2.520	0.745	0.688	0.188	0.370	0.688	C-S	4	5/16"-18 x 3/4"	3.2500
	3	2.370	2.755	0.745	0.688	0.188	0.370	0.688	C-S	4	5/16"-18 x 3/4"	3.7500
BUSHINGS: DEMOUNTABLE LOW PROFILE SHOULDER SELF LUBRICATING	1	1.157	1.542	0.745	0.688	0.188	0.370	0.688	C-S	3	5/16"-18 x 3/4"	1.5000
	1 1/4	1.347	1.732	0.745	0.688	0.188	0.370	0.688	C-S	3	5/16"-18 x 3/4"	1.7500
	1 1/2	1.467	1.852	0.745	0.688	0.188	0.370	0.688	C-S	3	5/16"-18 x 3/4"	2.0000
	1 3/4	1.597	1.982	0.745	0.688	0.188	0.370	0.688	C-S	3	5/16"-18 x 3/4"	2.2500
	2	1.772	2.157	0.745	0.688	0.188	0.370	0.688	C-S	3	5/16"-18 x 3/4"	2.5000
	2 1/2	1.987	2.372	0.745	0.688	0.188	0.370	0.688	C-S	3	5/16"-18 x 3/4"	3.0000
	3	2.237	2.622	0.745	0.688	0.188	0.370	0.688	C-S	3	5/16"-18 x 3/4"	3.5000
	3 3/4	2.737	3.122	0.745	0.688	0.188	0.370	0.688	C-S	3	5/16"-18 x 3/4"	4.5000
	4 1/2	3.237	3.622	0.745	0.688	0.188	0.370	0.688	C-S	3	5/16"-18 x 3/4"	5.5000
BUSHINGS: DEMOUNTABLE LOW PROFILE SHOULDER BRONZE RITE	1	1.063	1.297	0.469	0.500	0.125	0.219	0.469	C-DX	3	1/4"-20 x 5/8"	1.5000
	1 1/4	1.188	1.422	0.469	0.500	0.125	0.219	0.469	C-DX	3	1/4"-20 x 5/8"	1.7500
	1 1/2	1.438	1.750	0.719	0.719	0.193	0.453	0.453	C-DNI	3	5/16"-18 x 3/4"	2.0000
	1 3/4	1.594	1.906	0.719	0.719	0.193	0.453	0.453	C-DNI	4	5/16"-18 x 3/4"	2.2500
	2	1.781	2.094	0.719	0.719	0.193	0.453	0.453	C-DNI	4	5/16"-18 x 3/4"	2.5000
	2 1/2	2.141	2.453	0.719	0.719	0.193	0.453	0.453	C-DNI	4	5/16"-18 x 3/4"	3.2500

PIN & BUSHING CLAMP LOCATIONS

INCH

CLAMP DIMENSIONS

COMPONENT	NOM. DIA BUSH I.D. PIN O.D.	LOCATION		SIZE					CLAMP NO.	QTY	SCREW SIZE	BORING SIZE FOR PIN OR BUSHING +.0005/-.0000
		G	N	L	W	C	D	H				
BUSHINGS: DEMOUNTABLE BALL BEARING	1	1.313	1.698	0.745	0.688	0.188	0.370	0.688	C-S	3	5/16"-18 x 3/4"	1.8750
	1 1/4	1.438	1.823	0.745	0.688	0.188	0.370	0.688	C-S	3	5/16"-18 x 3/4"	2.1250
	1 1/2	1.688	2.073	0.745	0.688	0.188	0.370	0.688	C-S	4	5/16"-18 x 3/4"	2.5000
	1 3/4	1.813	2.198	0.745	0.688	0.188	0.370	0.688	C-S	4	5/16"-18 x 3/4"	2.7500
	2	2.063	2.448	0.745	0.688	0.188	0.370	0.688	C-S	4	5/16"-18 x 3/4"	3.2500
	2 1/2	2.313	2.698	0.745	0.688	0.188	0.370	0.688	C-S	4	5/16"-18 x 3/4"	3.7500
	3	2.625	3.010	0.745	0.688	0.188	0.370	0.688	C-S	4	5/16"-18 x 3/4"	4.2500
GUIDE PINS: DEMOUNTABLE FRICTION	7/8	0.844	1.229	0.745	0.688	0.188	0.370	0.688	C-S	3	5/16"-18 x 3/4"	0.8752
	1	0.906	1.291	0.745	0.688	0.188	0.370	0.688	C-S	3	5/16"-18 x 3/4"	1.0002
	1 1/4	0.985	1.391	0.822	0.625	0.250	0.443	0.752	C-DL	3	5/16"-18 x 3/4"	1.2502
	1 1/2	1.125	1.531	0.822	0.625	0.250	0.443	0.752	C-DL	3	5/16"-18 x 3/4"	1.5002
	1 3/4	1.297	1.703	0.822	0.625	0.250	0.443	0.752	C-DL	4	5/16"-18 x 3/4"	1.7502
	2	1.422	1.828	0.822	0.625	0.250	0.443	0.752	C-DL	4	5/16"-18 x 3/4"	2.0002
	2 1/2	1.672	2.078	0.822	0.625	0.250	0.443	0.752	C-DL	4	5/16"-18 x 3/4"	2.5002
	3	1.922	2.328	0.822	0.625	0.250	0.443	0.752	C-DL	4	5/16"-18 x 3/4"	3.0002
GUIDE PINS: DEMOUNTABLE BALL BEARING	1	0.906	1.291	0.745	0.688	0.188	0.370	0.688	C-S	3	5/16"-18 x 3/4"	0.9980
	1 1/4	0.985	1.391	0.822	0.625	0.250	0.443	0.752	C-DL	3	5/16"-18 x 3/4"	1.2480
	1 1/2	1.125	1.531	0.822	0.625	0.250	0.443	0.752	C-DL	3	5/16"-18 x 3/4"	1.4975
	1 3/4	1.297	1.703	0.822	0.625	0.250	0.443	0.752	C-DL	4	5/16"-18 x 3/4"	1.7475
	2	1.422	1.828	0.822	0.625	0.250	0.443	0.752	C-DL	4	5/16"-18 x 3/4"	1.9975
	2 1/2	1.672	2.078	0.822	0.625	0.250	0.443	0.752	C-DL	4	5/16"-18 x 3/4"	2.4970
	3	1.922	2.328	0.822	0.625	0.250	0.443	0.752	C-DL	4	5/16"-18 x 3/4"	2.9970

PIN & BUSHING CLAMP LOCATIONS — METRIC

CLAMP DIMENSIONS

COMPONENT	NOM. DIA BUSH I.D. PIN O.D.	LOCATION		SIZE					CLAMP NO.	QTY	SCREW SIZE	BORING SIZE FOR PIN OR BUSHING +.0005/-.0000
		G	N	L	W	C	D	H				
BUSHINGS: DEMOUNTABLE SHORT-MED-LONG SHOULDER FRICTION	18mm / 19mm	19,55	25,5	12,3	12,7	3,2	5,6	11,6	C-DX	2	M6x1.0 x 20mm	28,008
	24mm / 25mm	30,51	40,3	18,92	17,46	4,76	9,38	17,32	C-S	2	M8x1.25 x 20mm	38,008
	30mm / 32mm	34,01	43,8	18,92	17,46	4,76	9,38	17,32	C-S	3	M8x1.25 x 20mm	45,008
	38mm / 40mm	38,51	48,3	18,92	17,46	4,76	9,38	17,32	C-S	3	M8x1.25 x 20mm	54,010
	48mm / 50mm	44,51	54,3	18,92	17,46	4,76	9,38	17,32	C-S	4	M8x1.25 x 20mm	65,011
	63mm	53,51	63,3	18,92	17,46	4,76	9,38	17,32	C-S	4	M8x1.25 x 20mm	81,013
	80mm	64,51	74,3	18,92	17,46	4,76	9,38	17,32	C-S	4	M8x1.25 x 20mm	100,013
BUSHINGS: DEMOUNTABLE LOW PROFILE SHOULDER FRICTION	18mm / 19mm	19,55	25,5	12,3	12,7	3,2	5,6	11,6	C-DX	2	M6x1.0 x 20mm	28,008
	24mm / 25mm	30,84	37,94	17,5	14,5	5,0	10,0	10,0	C-DNM-96	3	M6x1.0 x 20mm	38,008
	30mm / 32mm	34,34	41,44	17,5	14,5	5,0	10,0	10,0	C-DNM-96	3	M6x1.0 x 20mm	45,008
	38mm / 40mm	41,0	52,1	24,6	18,9	7,9	13,0	13,0	C-DNM-97	4	M8x1.25 x 20mm	54,010
	48mm / 50mm	47,0	58,1	24,6	18,9	7,9	13,0	13,0	C-DNM-97	4	M8x1.25 x 20mm	65,011
	63mm	56,0	67,1	24,6	18,9	7,9	13,0	13,0	C-DNM-97	4	M8x1.25 x 20mm	81,013
	80mm	67,0	78,1	24,6	18,9	7,9	13,0	13,0	C-DNM-97	4	M8x1.25 x 20mm	100,013
BUSHINGS: DEMOUNTABLE BALL BEARING	25mm	34,91	44,7	18,92	17,46	4,76	9,38	17,32	C-S	3	M8x1.25 x 20mm	45,001
	32mm	38,41	48,2	18,92	17,46	4,76	9,38	17,32	C-S	3	M8x1.25 x 20mm	54,000
	40mm	45,91	55,7	18,92	17,46	4,76	9,38	17,32	C-S	4	M8x1.25 x 20mm	65,001
	50mm	53,91	63,7	18,92	17,46	4,76	9,38	17,32	C-S	4	M8x1.25 x 20mm	81,000
	63mm	61,91	71,7	18,92	17,46	4,76	9,38	17,32	C-S	4	M8x1.25 x 20mm	95,001
	80mm	67,91	77,7	18,92	17,46	4,76	9,38	17,32	C-S	4	M8x1.25 x 20mm	108,000
GUIDE PINS: DEMOUNTABLE	18mm	16,05	22,0	12,3	12,7	3,2	5,6	11,6	C-DX	3	M6x1.0 x 20mm	17,963
	19mm	16,05	22,0	12,3	12,7	3,2	5,6	11,6	C-DX	3	M6x1.0 x 20mm	18,956
	24mm	23,01	32,8	18,92	17,46	4,76	9,38	17,32	C-S	3	M8x1.25 x 20mm	23,957
	25mm	23,01	32,8	18,92	17,46	4,76	9,38	17,32	C-S	3	M8x1.25 x 20mm	24,956
	30mm	25,9	36,2	19,6	15,9	6,3	10,9	18,9	C-DL	3	M8x1.25 x 20mm	29,957
	32mm	25,9	36,2	19,6	15,9	6,3	10,9	18,9	C-DL	3	M8x1.25 x 20mm	31,946
	38mm	30,9	41,2	19,6	15,9	6,3	10,9	18,9	C-DL	4	M8x1.25 x 20mm	37,950
	40mm	30,9	41,2	19,6	15,9	6,3	10,9	18,9	C-DL	4	M8x1.25 x 20mm	39,947
	48mm	37,4	47,7	19,6	15,9	6,3	10,9	18,9	C-DL	4	M8x1.25 x 20mm	47,950
	50mm	37,4	47,7	19,6	15,9	6,3	10,9	18,9	C-DL	4	M8x1.25 x 20mm	49,947
	63mm	43,4	53,7	19,6	15,9	6,3	10,9	18,9	C-DL	4	M8x1.25 x 20mm	62,934
	80mm	51,9	62,2	19,6	15,9	6,3	10,9	18,9	C-DL	4	M8x1.25 x 20mm	79,929

900 West Drexel Avenue
Oak Creek, WI 53154

(800) 558-6040
FAX (800) 657-0855

www.superiordieset.com
messages@superiordieset.com

copyright © 2019 Superior Die Set Corp.
Form-V1.3-DSC-1019