EXΔflow®

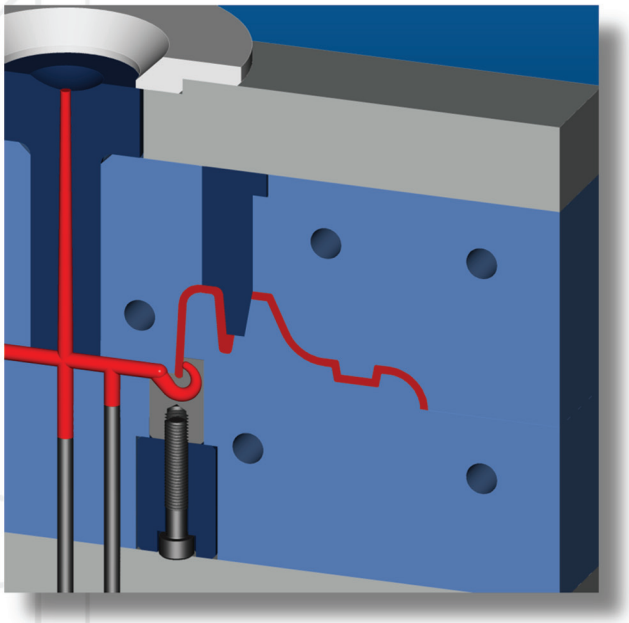

Tunnel Gate Inserts

Ringelflow

Maxiflow

SUPERIOR DIE SET CORPORATION®

Table of contents

Table of Contents 2

EXAflow® the Original / The Benefits 3

Standardflow - GTR 4-5

Standardflow - GTE 6

Miniflow - GTM 7

Auxiliary Insert 8

Electrode for Dead-end Recess 9

Installation Examples 10-15

Konturflow® - GTK 16

Calotte Design 17-19

Ringelflow - GRF-1 20-21

Maxiflow - GXK 22-23

Installation Dimensions 24-25

Tables of Viscosity 26-27

Midiflow - GMK 28

Midiflow - GMK-1 29

Midiflow - GMK-2 30

Midiflow - GMK-3 31

Installation Dimensions - GXK, GMK 32

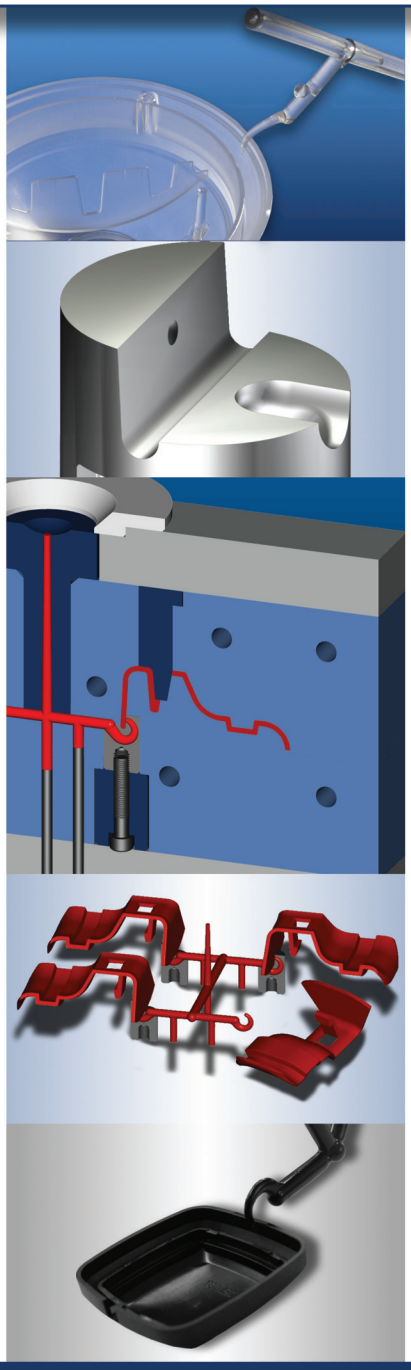

Benefit from our product advantages:

- Perfect surface quality and concealed gate marks through tunnel gating, even on rear molding wall thanks to innovative Ringelflow technology
- Variable gate diameters from 0.5 to 3.5 mm
- Clearly defined separating edge for precise de-gating
- Save time and cost through fast & easy interchangeability
- High wear resistance
- Compact dimensions due to single-part design
- Enhances molding process reliability
- Unsurpassed balance in multiple gating applications

Innovation is a key success driver at EXAflow®. Our ambition is to create innovative products and solutions for the injection molding industry, and to provide our customers with a decisive head start in a highly competitive environment, now and in the future.

- *EXAflow® products are designed to help you build molds reliably and at favorable cost.*
- *We are determined to provide you with just the right gate insert for your application.*
- *Our goal is complete customer satisfaction, both with innovative molding products and our extensive support.*

As a specialist for gate insert technology, we develop and provide sophisticated solutions for plastic injection molders and support them with complete service.

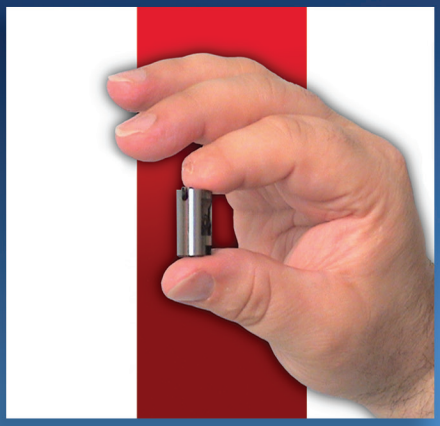

SUPERIOR®
900 W. Drexel Avenue • Oak Creek, WI 53154
Phone (800) 558-6040 • FAX (800) 657-0855
superiordieset.com

Standardflow - GTR

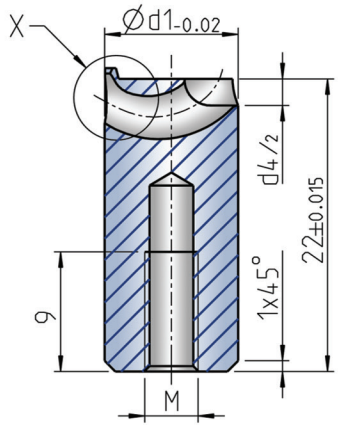

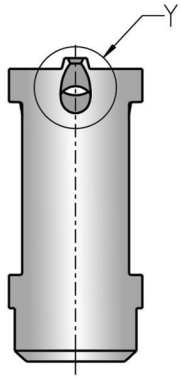

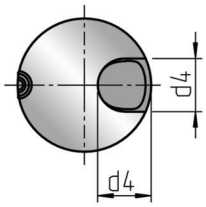

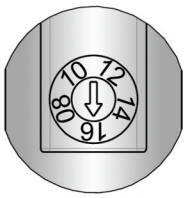

Size stamp (Ø d2)

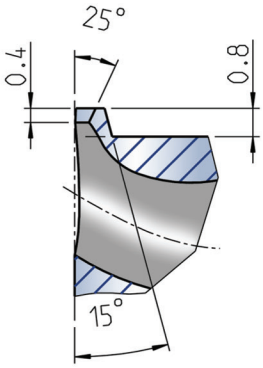

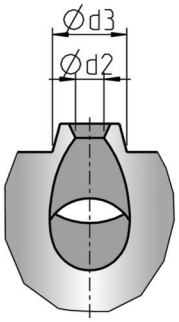

Size Table GTR 10

Part No.	d1	d2	d3	d4	M	Viscosity (Rheology GTR) High	Medium	Low
GTR 10-08		0,8	2,1			8	7	5
GTR 10-10		1	2,3			14	12	9
GTR 10-12	10	1,2	2,5	4	4	20	16	10
GTR 10-14		1,4	2,7			30	23	15
GTR 10-16		1,6	2,9			40	30	20
						Weight in grams		

Size Table GTR 12

Part No.	d1	d2	d3	d4	M	Viscosity (Rheology GTR) High	Medium	Low
GTR 12-08		0,8	2,1			8	7	5
GTR 12-10		1	2,3			14	12	9
GTR 12-12		1,2	2,5			20	16	10
GTR 12-14	12	1,4	2,7	5	5	30	23	15
GTR 12-16		1,6	2,9			40	30	20
GTR 12-18		1,8	3,1			54	40	27
GTR 12-20		2	3,3			68	52	34
						Weight in grams		

Size Table GTR 14

Part No.	d1	d2	d3	d4	M	Viscosity (Rheology GTR) High	Medium	Low
GTR 14-12		1,2	2,5			20	16	10
GTR 14-14		1,4	2,7			30	23	15
GTR 14-16		1,6	2,9			40	30	20
GTR 14-18	14	1,8	3,1	6	6	54	40	27
GTR 14-20		2	3,3			68	52	34
GTR 14-22		2,2	3,5			85	65	43
GTR 14-24		2,4	3,7			100	80	50
						Weight in grams		

Technical information

For tunnel gating of small to medium-sized moldings along a flat separating plane. The projecting calotte ensures concealed de-gating.

- *Available gate diameters from 0.8 to 2.4 mm.*
- *Usable for all thermoplastics including 50% glass fiber reinforcing types.*

Standardflow - GTR

Preferred anti-rotation locking system

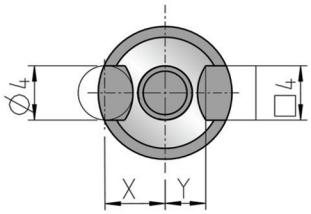

Anti-rotation locking system demensions		
EXAflow® Type	Parallel Pin Distance X	Key Distance Y
GTR 10	4,5 mm	3,0 mm
GTR 12	5,2 mm	3,8 mm
GTR 14	6,0 mm	4,5 mm

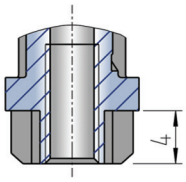

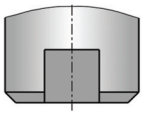

Alternate anti-rotation locking system

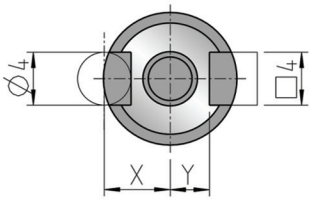

Anti-rotation locking system demensions			
EXAflow® Type	Parallel Pin Distance X	Key Distance Y	Width
GTR 10	5,0 mm	3,0 mm	6,0 mm
GTR 12	6,0 mm	4,0 mm	7,0 mm
GTR 14	----	----	

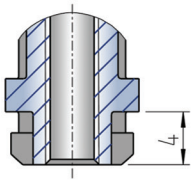

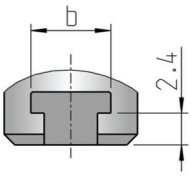

Installation instruction - Anti-rotation locking system

The insert can be secured against inadvertent rotation by a parallel pin and key system. In most cases the gate insert is adequately secured by the bolt.

SUPERIOR®

900 W. Drexel Avenue • Oak Creek, WI 53154
Phone (800) 558-6040 • FAX (800) 657-0855
superiordieset.com

Standardflow - GTE

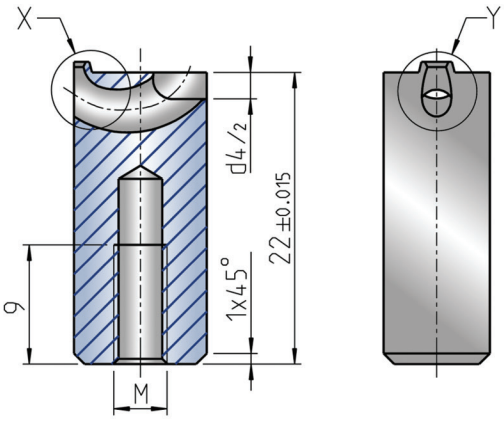

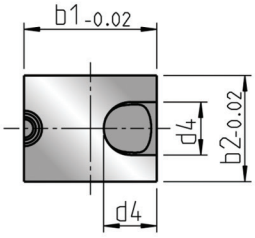

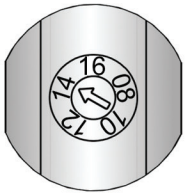

Size stamp (Ø d2)

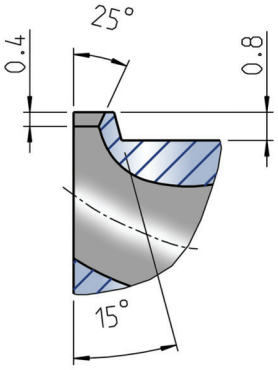

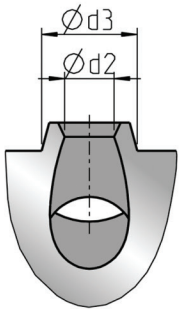

Size Table GTR 10

Part No.	d1	d2	d3	d4	M		Viscosity (Rheology GTR) High	Medium	Low
GTE 10-08	10	8	0,8	2,1	4	4	8	7	5
GTE 10-10			1	2,3			14	12	9
GTE 10-12			1,2	2,5			20	16	10
GTE 10-14			1,4	2,7			30	23	15
GTE 10-16			1,6	2,9			40	30	20
							Weight in grams		

Size Table GTR 12

Part No.	d1	d2	d3	d4	M		Viscosity (Rheology GTR) High	Medium	Low
GTE 12-08	12	10	0,8	2,1	5	5	8	7	5
GTE 12-10			1	2,3			14	12	9
GTE 12-12			1,2	2,5			20	16	10
GTE 12-14			1,4	2,7			30	23	15
GTE 12-16			1,6	2,9			40	30	20
GTE 12-18			1,8	3,1			54	40	27
GTE 12-20			2	3,3			68	52	34
							Weight in grams		

Size Table GTR 14

Part No.	d1	d2	d3	d4	M		Viscosity (Rheology GTR) High	Medium	Low
GTE 14-12	14	12	1,2	2,5	6	6	20	16	10
GTE 14-14			1,4	2,7			30	23	15
GTE 14-16			1,6	2,9			40	30	20
GTE 14-18			1,8	3,1			54	40	27
GTE 14-20			2	3,3			68	52	34
GTE 14-22			2,2	3,5			85	65	43
GTE 14-24			2,4	3,7			100	80	50
							Weight in grams		

Technical information

For tunnel gating of small to medium-sized moldings along a flat separating plane. The projecting calotte ensures concealed de-gating.

- *Available gate diameters from 0.8 to 2.4 mm.*
- *Usable for all thermoplastics including 50% glass fiber reinforcing types.*

Miniflow - GTM

Size Table GTM								
Part No.	b1	b2	b3	b4	M	Viscosity (Rheology)		
						High	Medium	Low
GTM 10-05	10	5	0,5	3	3	4	4	3
GTM 10-07			0,7			6	5	4
GTM 10-09			0,9			12	9	7
GTM 10-11			1,1			17	14	9
						Weight in grams		

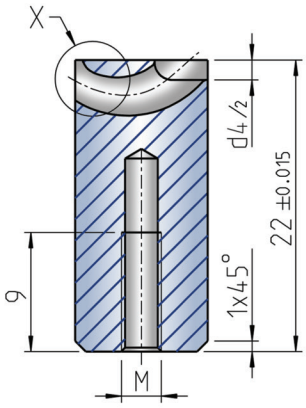

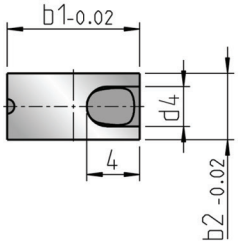

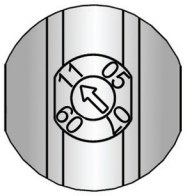

Size stamp (Ø d2)

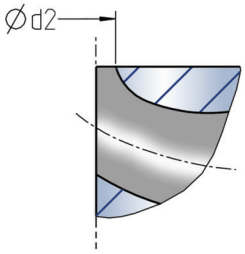

Technical information

For tunnel gating of small, thin-walled moldings. This gate insert possesses no calotte and is therefore suitable for very thin-walled moldings.

- *Available gate diameters from 0.5 to 1.1 mm.*
- *Usable for all thermoplastics including 50% glass fiber reinforcing types.*

SUPERIOR®

900 W. Drexel Avenue • Oak Creek, WI 53154
Phone (800) 558-6040 • FAX (800) 657-0855
superiordieset.com

Auxiliary insert

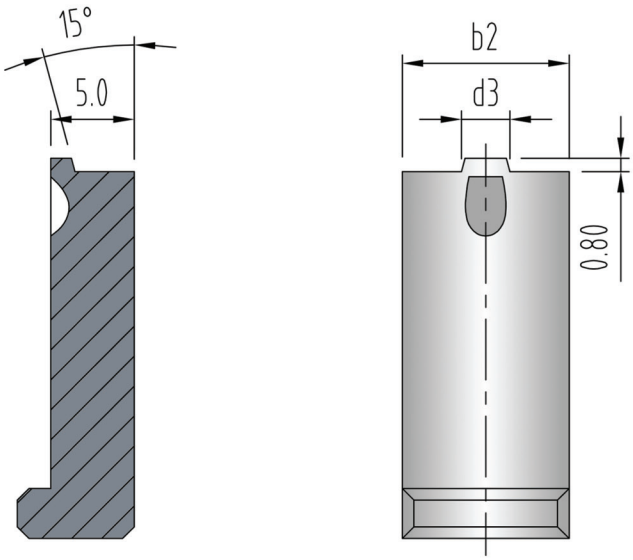

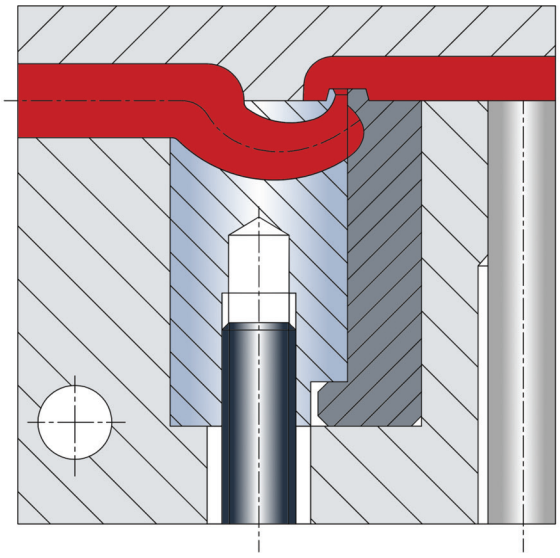

Technical information

The auxiliary insert should be made from a highly wear-resistant steel (e.g., D2 with a hardness of 60 HRC).

The dimensions b2 and d3 depend on the size of the selected gate insert.

Electrode for dead-end recess

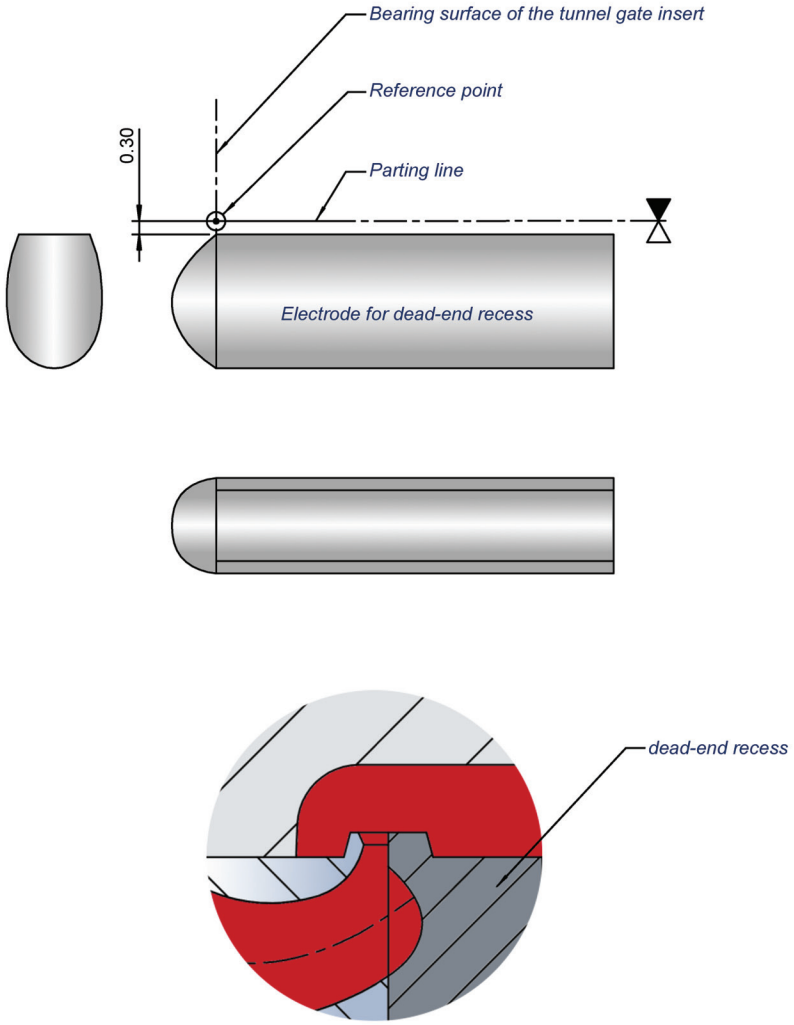

Technical information

A dead-end recess breaking the force of the melt flow can be machined either into an auxiliary insert or directly into the cavity.
For recess geometries in various CAD formats please refer to
http://www.exaflow.com
NOTE: When machining the recess, do not undercut the runner.

SUPERIOR
900 W. Drexel Avenue • Oak Creek, WI 53154
Phone (800) 558-6040 • FAX (800) 657-0855
superiordieset.com

Installation example – Standard

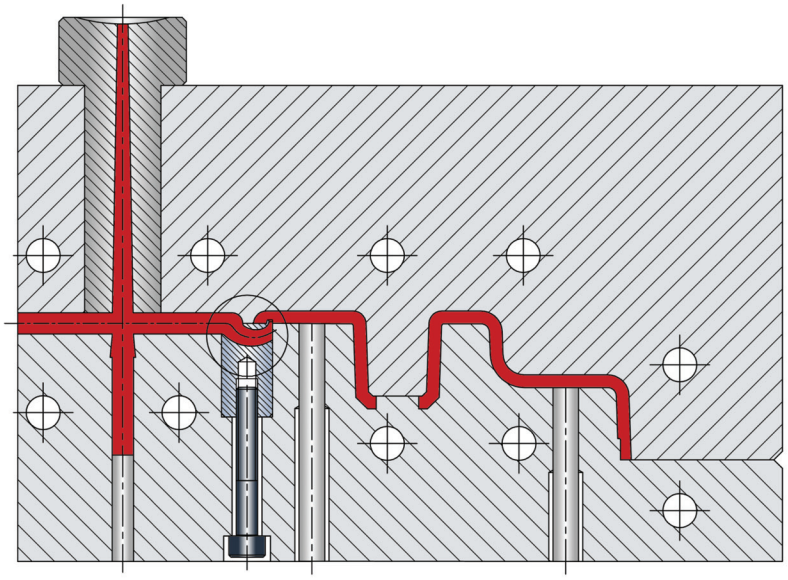

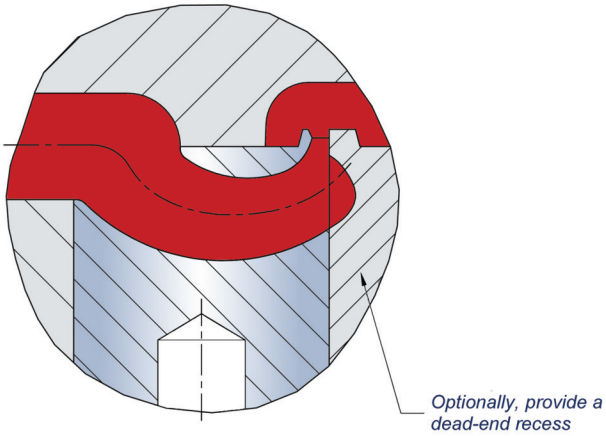

Technical information

The front of the gate insert is sealed off by the mold cavity

- *to reduce pressure loss.*
- *to avoid jetting.*

Installation example – Flat parts

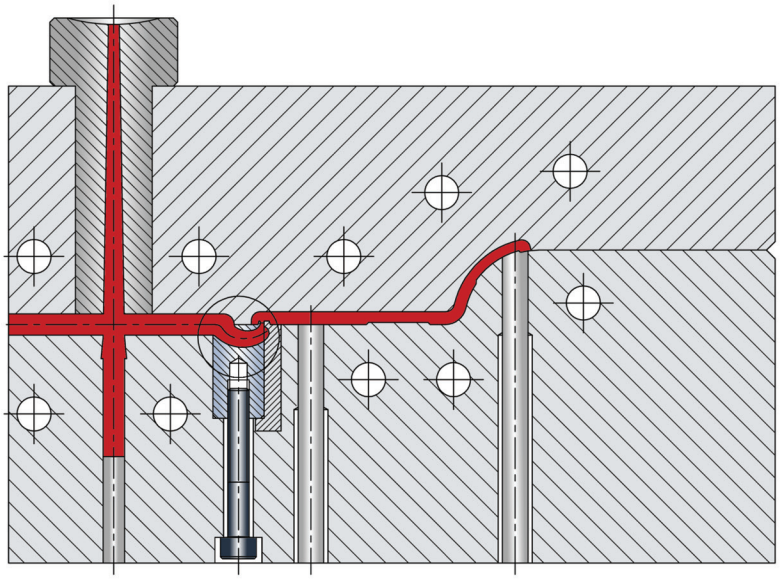

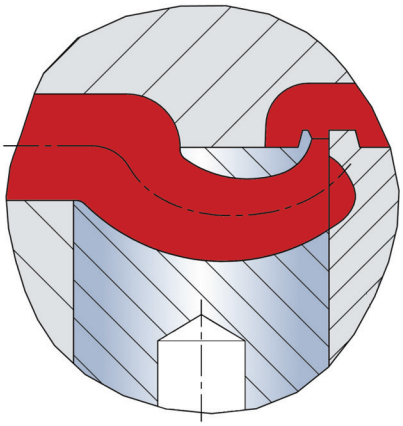

Technical information

The front of the gate insert is fully sealed off by a companion calotte on the cavity or by an auxiliary insert

- *to reduce pressure loss.*
- *to minimize shear.*

SUPERIOR®
900 W. Drexel Avenue • Oak Creek, WI 53154
Phone (800) 558-6040 • FAX (800) 657-0855
superiordieset.com

Installation example – Thin-walled parts Standardflow

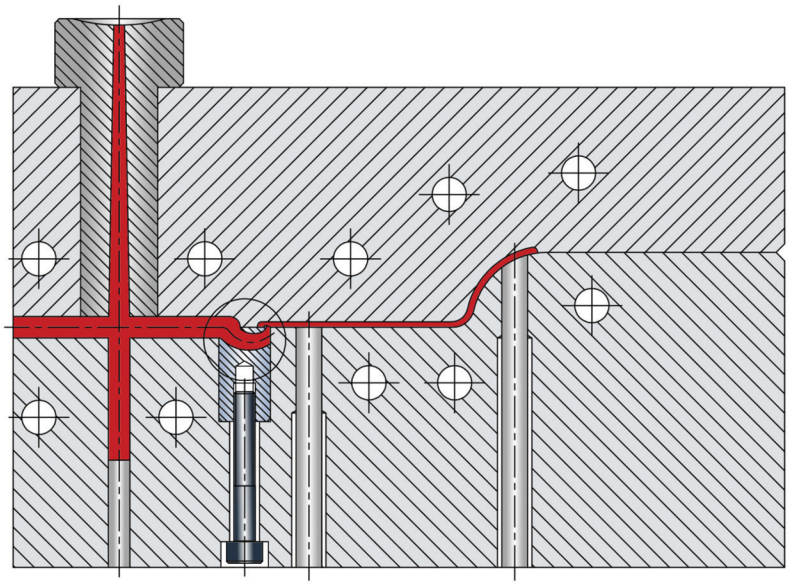

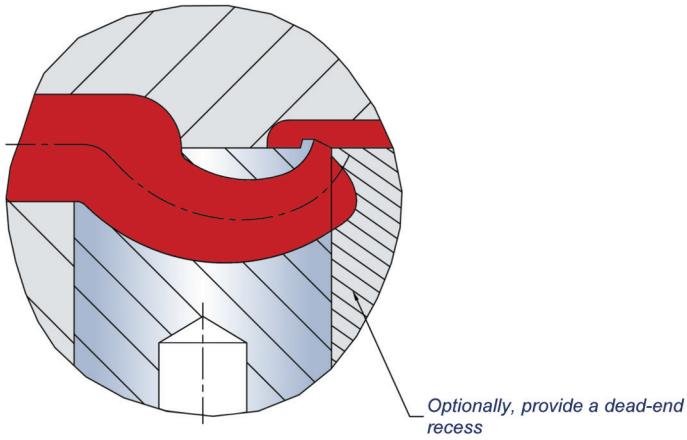

Technical information

The calotte height can be reduced by 0.4 mm if desired. This is the level of the defined stall edge. The front of the gate insert is sealed off by the cavity to the level of the parting line

- *to reduce pressure loss.*
- *to minimize shear.*

Installation example – Thin-walled parts Miniflow

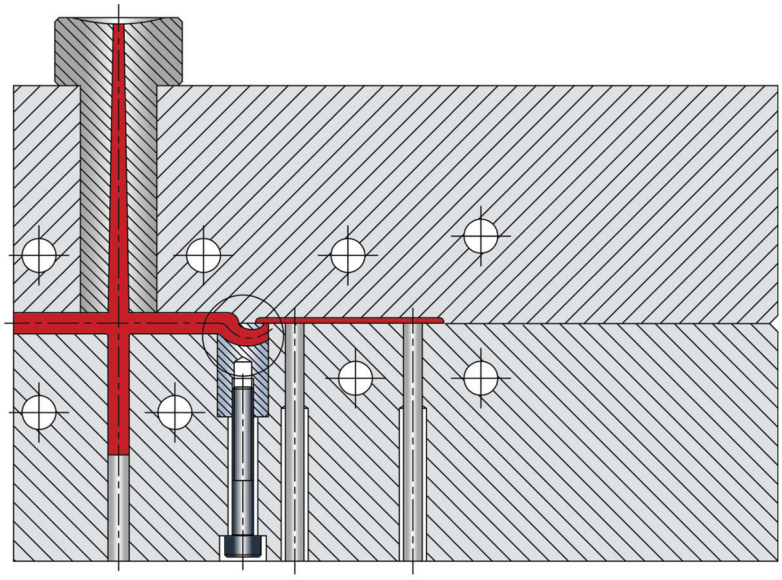

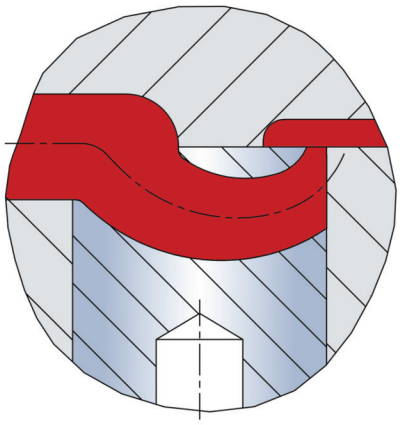

Technical information

Designed for particularly thin-walled parts (0.5 to 1.2 mm wall thickness). The tunnel gate insert has no calotte. Gating will occur flush with the molding.

- *The gating point will be flush with, or slightly projecting from, the bottom surface depending on plastic used.*

SUPERIOR®
900 W. Drexel Avenue • Oak Creek, WI 53154
Phone (800) 558-6040 • FAX (800) 657-0855
superiordieset.com

Installation example – Nozzle-side installation

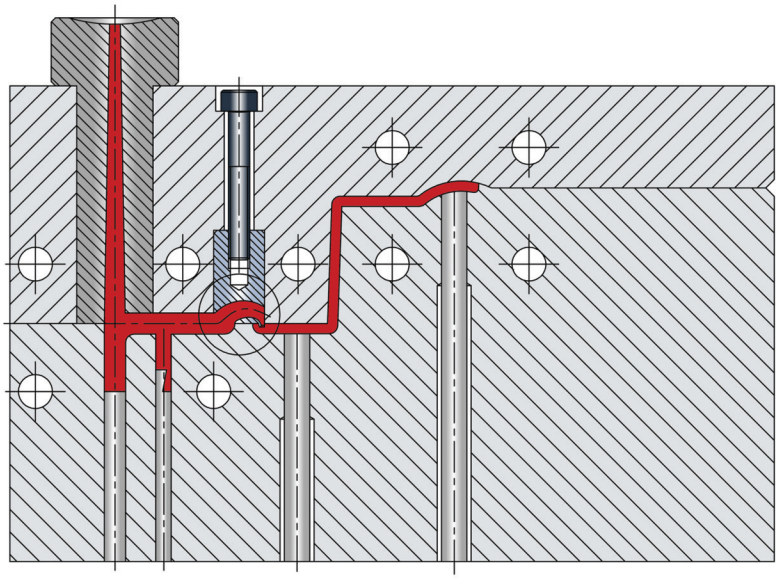

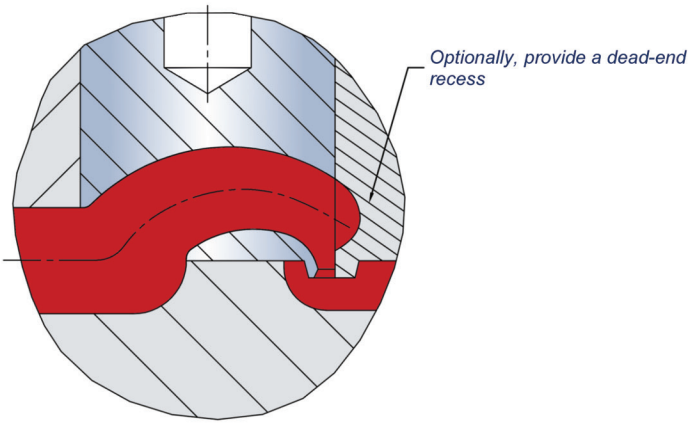

Technical information

The gate insert is installed into the nozzle side of the mold. The front of the gate insert is sealed off by the cavity

- *to reduce pressure loss.*
- *to minimize shear.*

Installation example – Thermoplastic Elastomers

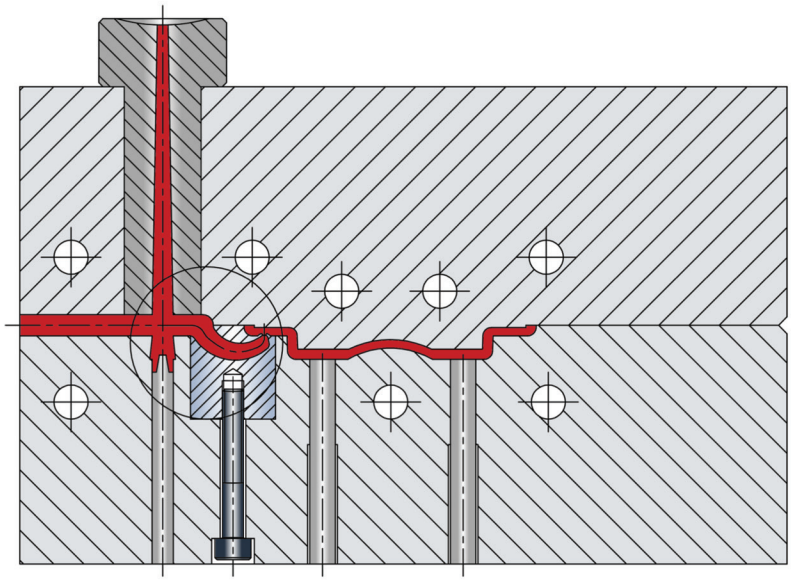

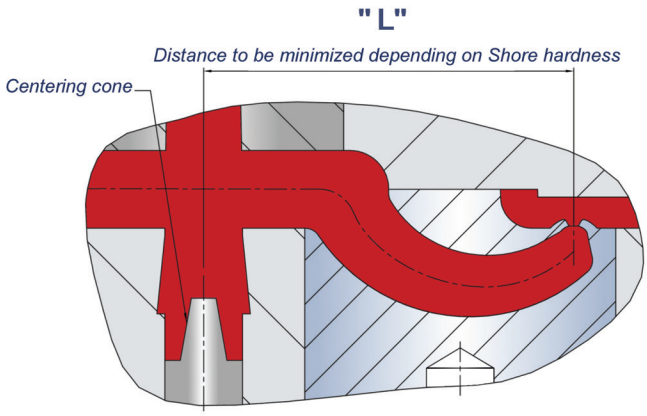

Technical information

When processing thermoplastic elastomers, please observe the following recommendations to ensure reliable demolding:

- *the distance "L" should decrease with the Shore hardness value*
- *a centering cone should be provided*
- *this application instruction applies to elastomers in the medium Shore hardness range (up to 100 Shore A)*

SUPERIOR
900 W. Drexel Avenue • Oak Creek, WI 53154
Phone (800) 558-6040 • FAX (800) 657-0855
superiordieset.com

Konturflow® - GTK

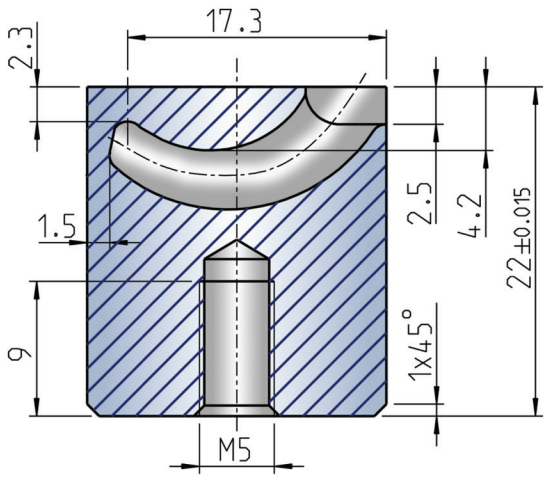

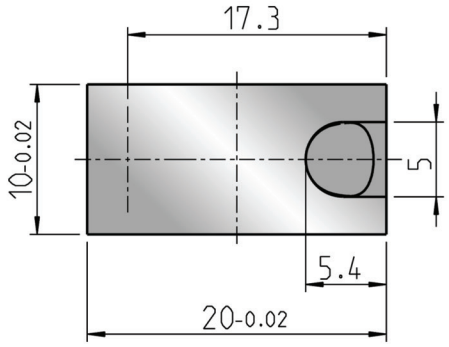

Technical information

For tunnel gating of small to medium-sized moldings contoured in the gate area.

- *Maximum gate diameter (pointed tunnel) up to 1.7 mm.*
- *Contourable up to 3 mm depth.*
- *Usable for all thermoplastics including 50% glass fiber reinforcing types.*

SUPERIOR®

900 W. Drexel Avenue • Oak Creek, WI 53154
Phone (800) 558-6040 • FAX (800) 657-0855
superiordieset.com

Standard Calotte design

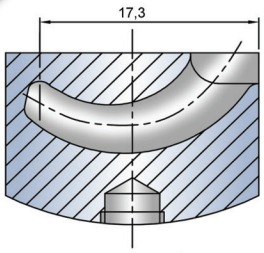

Contourable insert in unfinished state

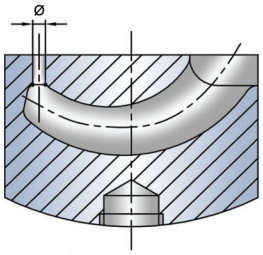

Diameter to be defined in accordance with the table

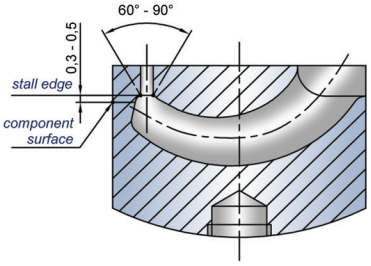

Define 60 to 90 angle at bore / tunnel intersection point

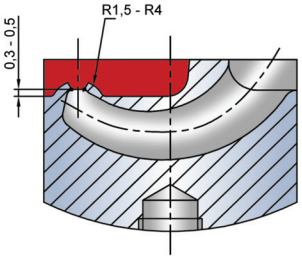

Calotte wall thickness to be min. 0.5 < max. 0.7 mm

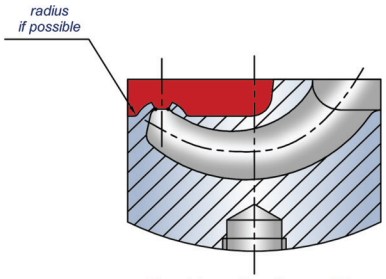

Provide radius if possible

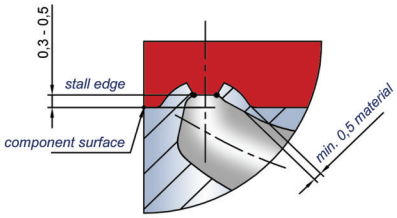

Finished calotte configuration

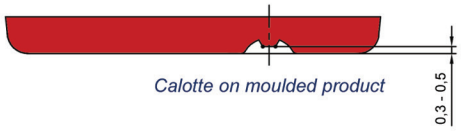

Calotte on moulded product

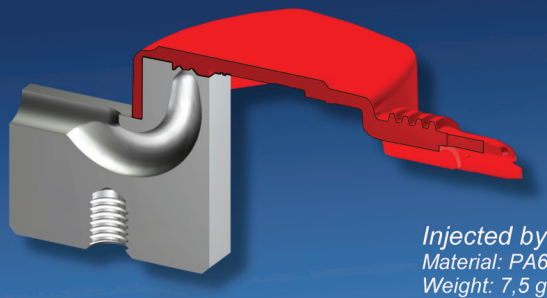

Injected by: Maxiflow - GXK-1
Material: PA66 GF25
Weight: 7,5 g

"Inclined Surface" Calotte Design

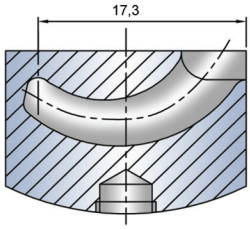

Contourable insert in unfinished state

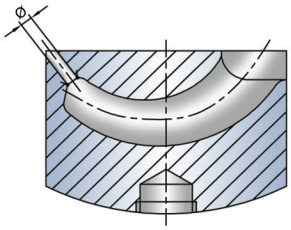

Diameter to be defined in accordance with the table

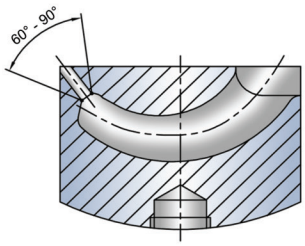

Define 60 to 90 angle at bore / tunnel intersection point

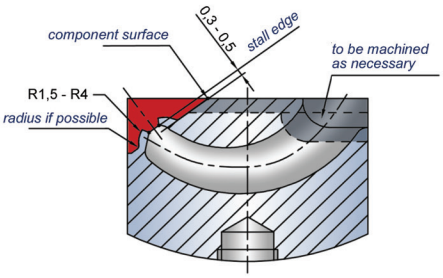

Calotte wall thickness to be min. 0.5 < max. 0.7 mm

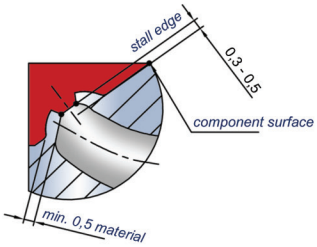

Provide radius if possible

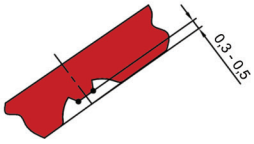

Calotte on molded product

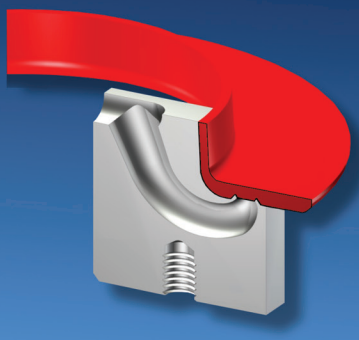

Injected by: Maxiflow GXK-3
Material: PA66 GF35
Weight: 18,5 g

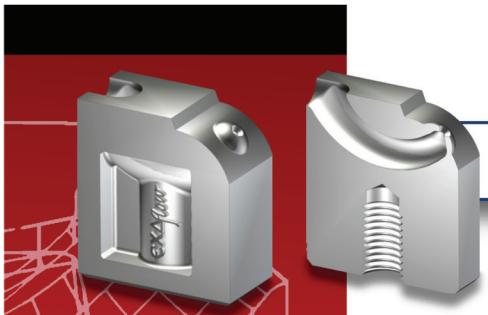

"Curved Surface" Calotte Design

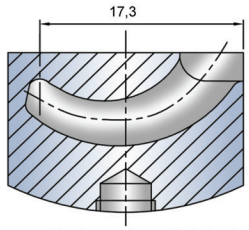

Contourable insert in unfinished state

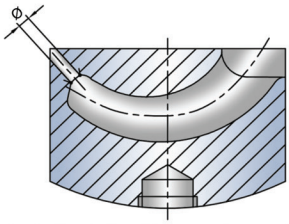

Diameter to be defined in accordance with the table

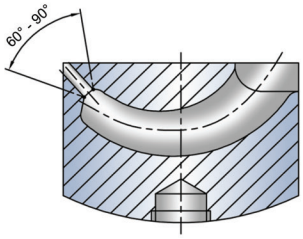

Define 60 to 90 angle at bore / tunnel intersection point

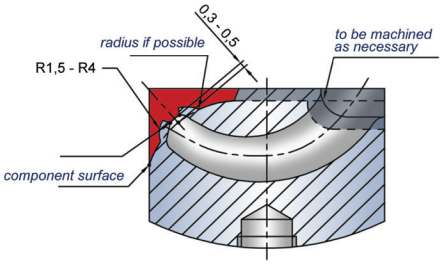

Calotte wall thickness to be min. 0.5 < max. 0.7 mm

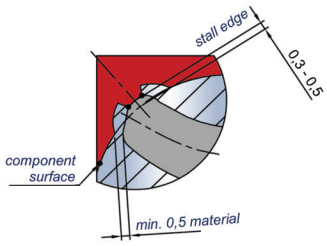

Provide radius if possible

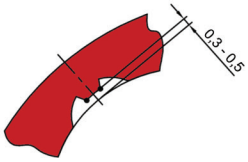

Calotte on molded product

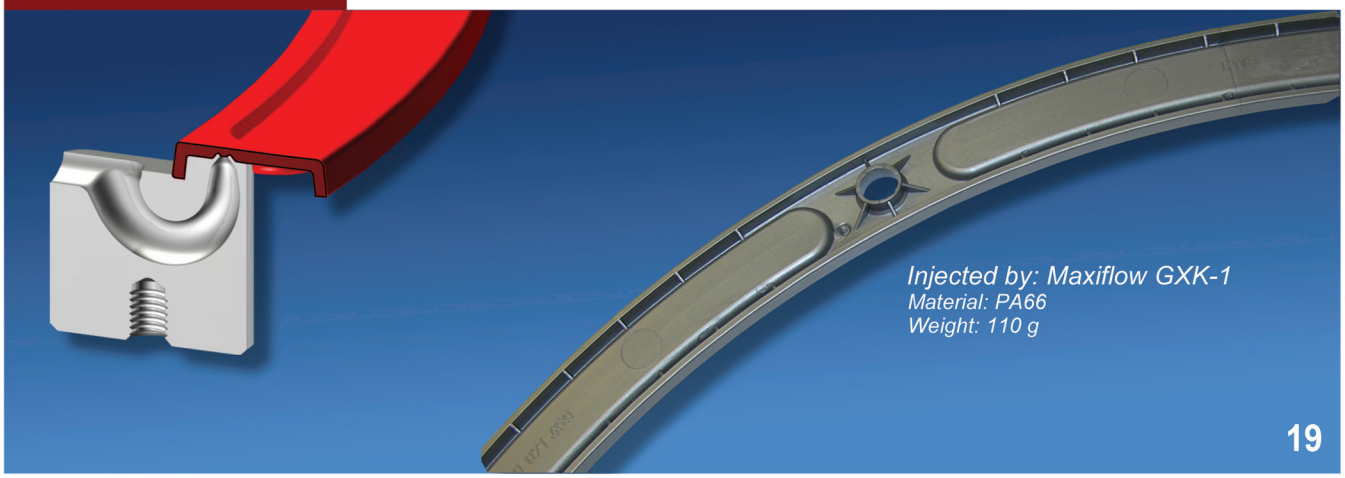

Injected by: Maxiflow GXK-1
Material: PA66
Weight: 110 g

Ringelflow - GRF-1

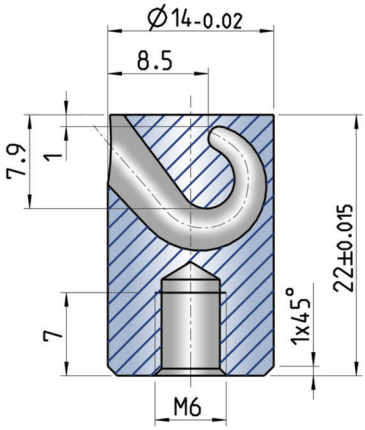

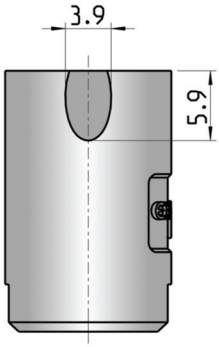

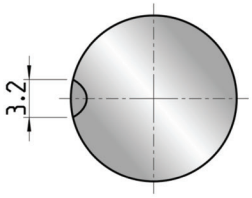

Technical informations

For rear surface gating of small-to-medium sized moldings. Supports gate diameters up to 2.5 mm and shot weights up to 200 g per insert. The GRF-1 from EXAflow® can be used to process all common non-reinforced plastic types.
For filled and brittle plastics please contact Superior for technical support.

Ringelflow - GRF-1

Installation examples GRF-1

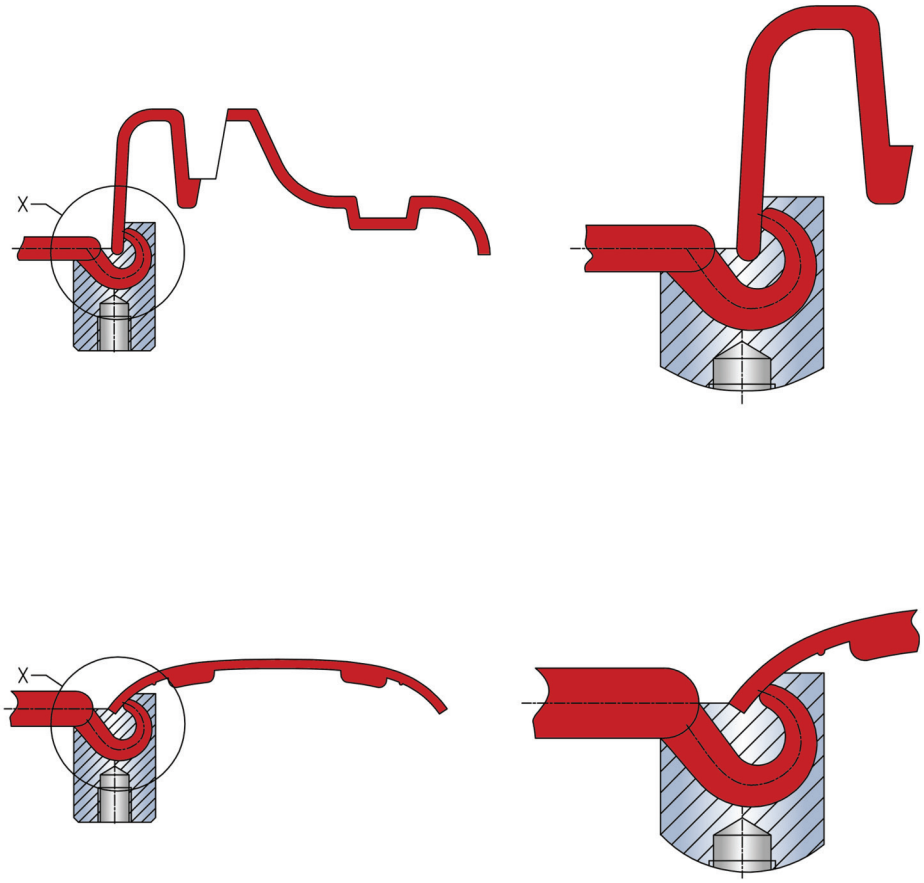

Ringelflow benefits

- optimum solution to prevent jetting
- no gate marks on visible external surfaces and bottom wall
- ideal for fully rounded edges (e.g,. toys, moldings with sealing edges and joints)
- permits internal gating of 2-shot molds

SUPERIOR
900 W. Drexel Avenue • Oak Creek, WI 53154
Phone (800) 558-6040 • FAX (800) 657-0855
superiordieset.com

Maxiflow - GXK

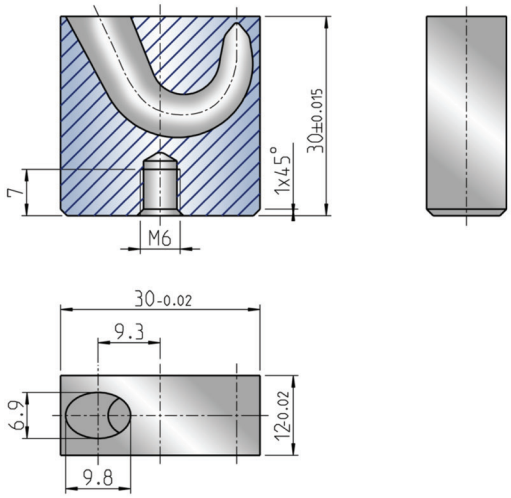

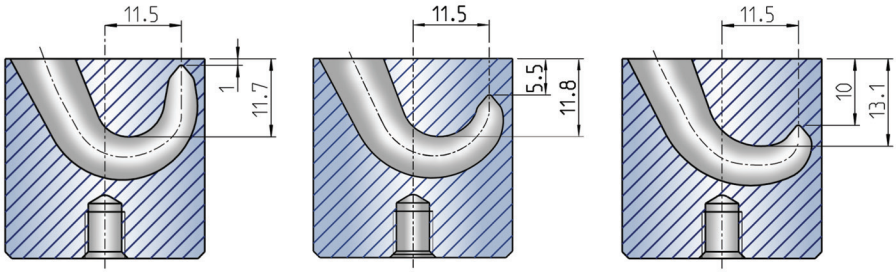

GXK-1 **GXK-2** **GXK-3**

Technical information

For bottom (submarine) gating of medium-to-large components. Supports contouring to a depth of 11.5 mm. Suitable for gate diameters up to 3.5 mm and shot weights up to 1,200 g per insert.
The Maxiflow range from EXAflow® can be used to process all common plastics, including 50% glass fiber reinforcing types.

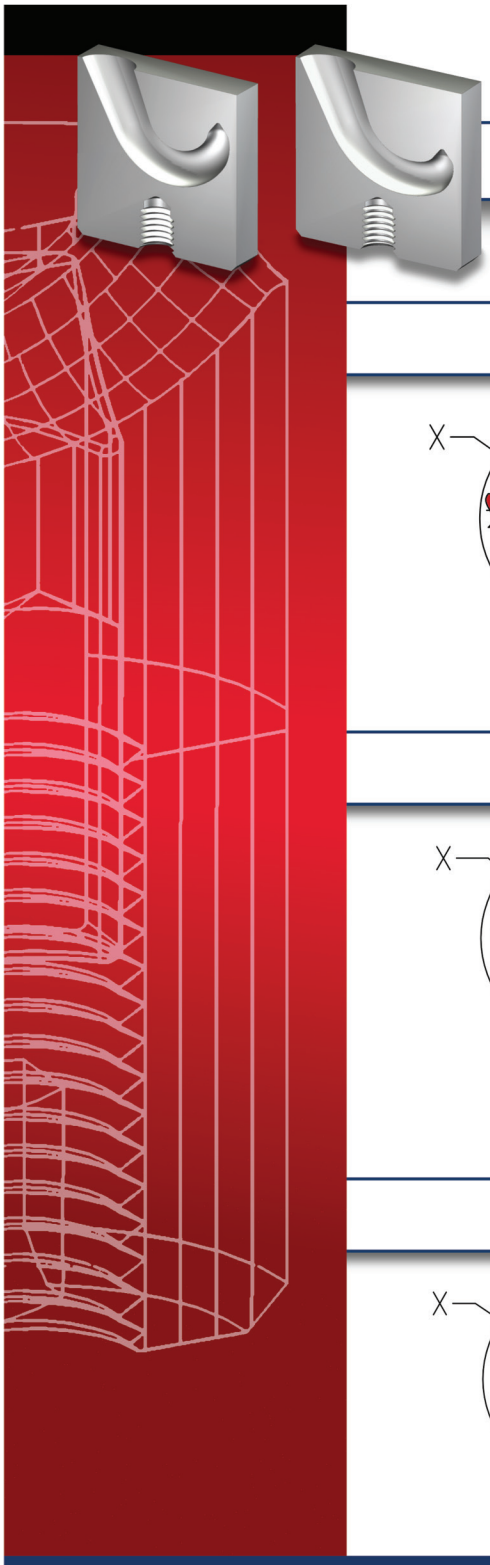

Maxiflow - GXK

Installation example GXK-1

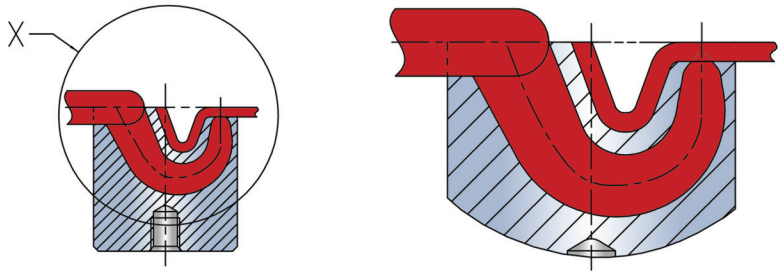

Installation example GXK-2

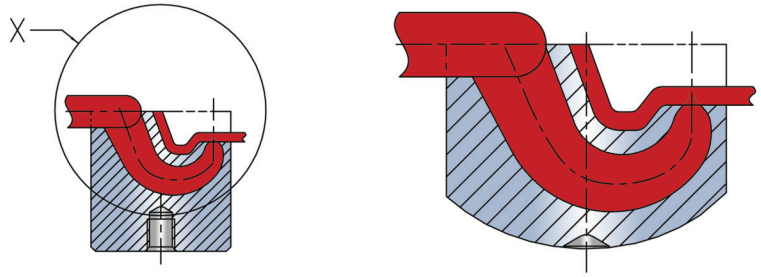

Installation example GXK-3

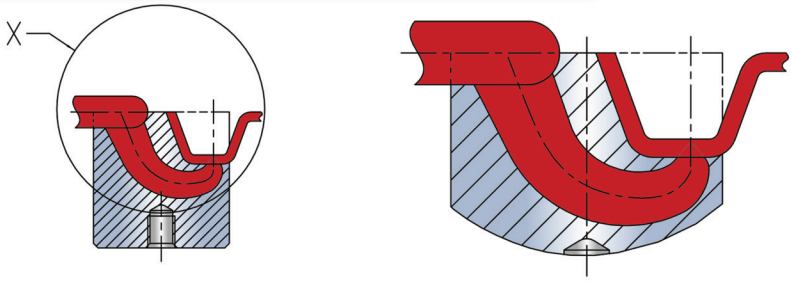

Maxiflow benefits

- *Gating point may be located up to 10 mm above or below the parting line.*
- *Permits gating immediately behind projecting ribs.*
- *Gate may be located away from molding surface.*

SUPERIOR®
900 W. Drexel Avenue • Oak Creek, WI 53154
Phone (800) 558-6040 • FAX (800) 657-0855
superiordieset.com

Installation dimensions – Standard

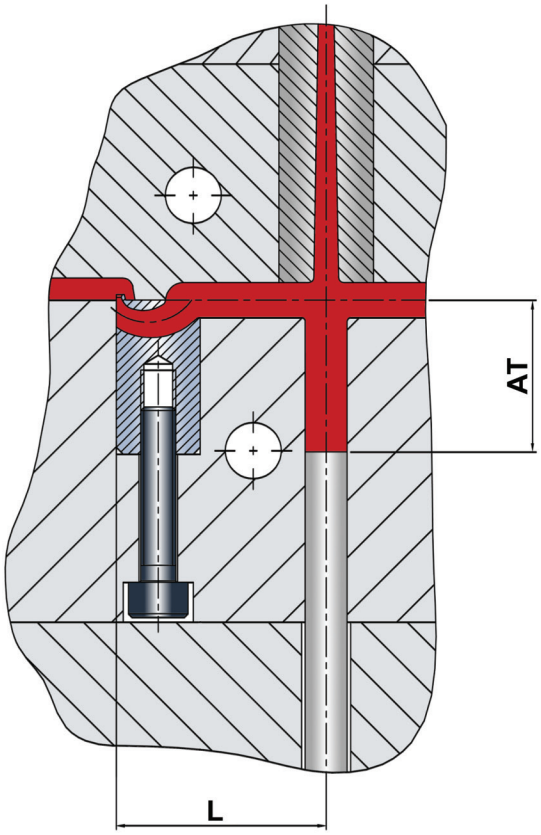

Plastic group	GTM	GTR/GTE	GTK
HD-PE, LD-PE, PET, PP, PA, PC, PVC. (L)	>15	>20	>25
Runner design	round	round	round
Ejector depth (AT)	>11	>16	>20
ABS, M ABS, ASA, PS, PC/ABS, POM, PBT. (L)	>20	>25	>30
Runner design	round	round	round
Ejector depth (AT)	>14	>20	>24
Elastomere TPE, TPU, TPP, TPA. (L)	>15	>15	>20
Runner design	optional	optional	optional
Ejector depth (AT)	>11	>11	>16
Brittle plastics	>25	>30	>40
Runner design	half-round	half-round	half-round
Ejector depth (AT)	>18	>24	>32

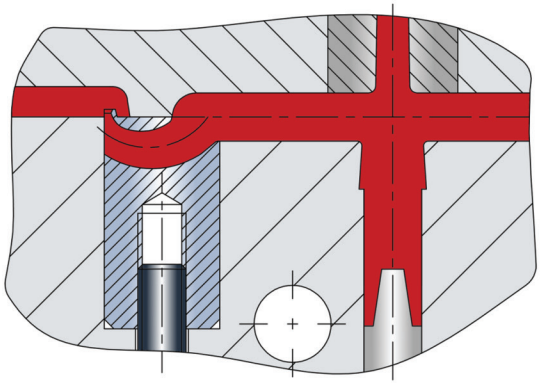

Technical information

Recommended distances "L" from the injection point to the sprue ejector are given above for the various material groups.

The distance "AT" describes the correlated ejector depth.

Installation dimensions – GRF and GXK

Plastic group	GRF	GXK
HD-PE, LD-PE, PET, PP, PA, PC, PVC. (L)	>30	>35
Runner design	round	round
Ejector depth (AT)	>30	>35
ABS, M ABS, ASA, PS, PC/ABS, POM, PBT. (L)	>30	>40
Runner design	round	round
Ejector depth (AT)	>30	>40
Elastomere TPE, TPU, TPP, TPA. (L)	>20	>30
Runner design	optional	optional
Ejector depth (AT)	>20	>30
Brittle plastics	on request	on request
Runner design	half-round	half-round
Ejector depth (AT)	on request	on request

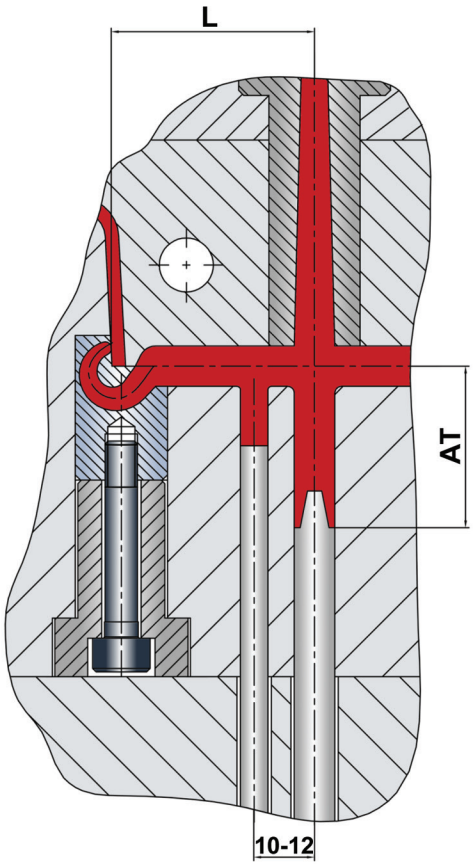

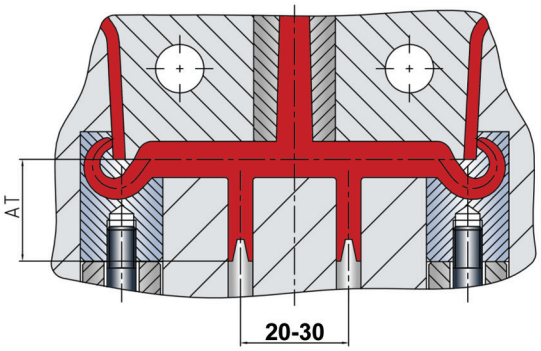

Technical information

Recommended distances "L" from the injection point to the sprue ejector are given above for the various material groups.

The distance "AT" describes the correlated ejector depth.

SUPERIOR®
900 W. Drexel Avenue • Oak Creek, WI 53154
Phone (800) 558-6040 • FAX (800) 657-0855
superiordieset.com

Tables of viscosity - Standard Tunnel Gates

Low Viscosity (PA, PE, PC, PP, PET, PVC, PS, SB, TPA, TPE, TPU)

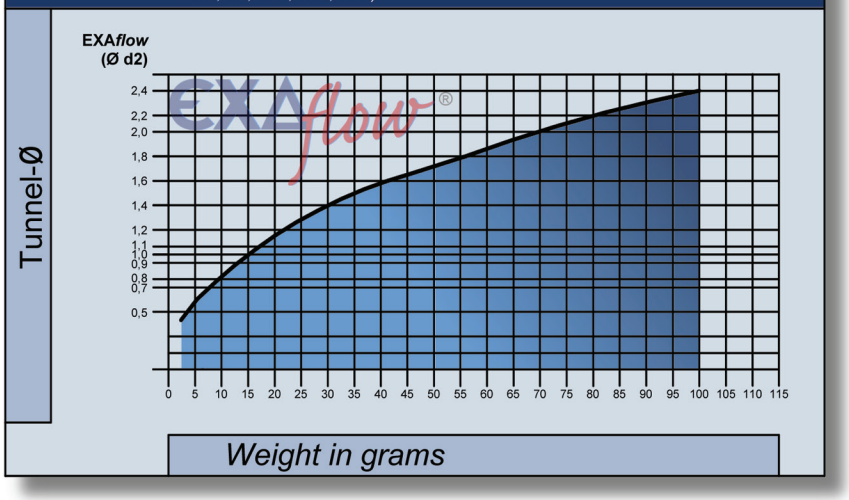

Medium Viscosity (ABS, ASA, PS, PC/ABS, PBT, SAN

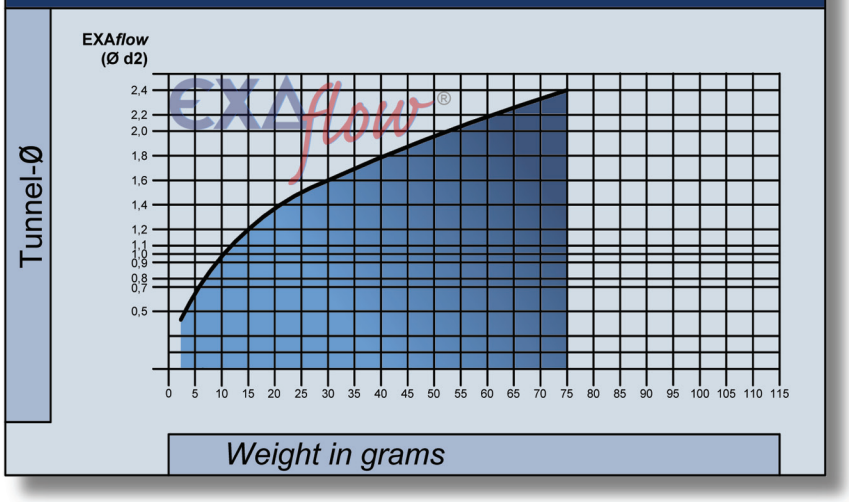

High Viscosity (PC, PPS, PSU, POM-H, PES, PPO, PEI, PC-ABS, PC-PBT, PMMA, PVC)

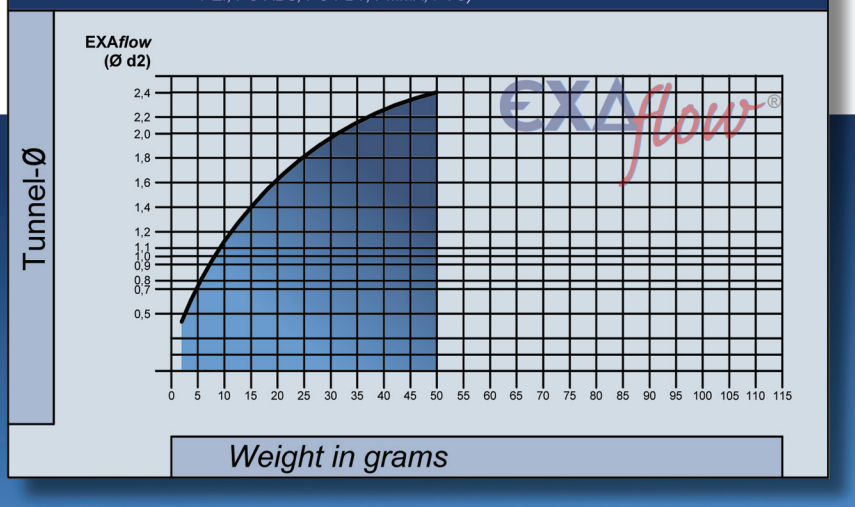

Tables of viscosity – Konturflows

Low Viscosity (PA, PE, PC, PP, PET, PVC, PS, SB, TPA, TPE, TPU)

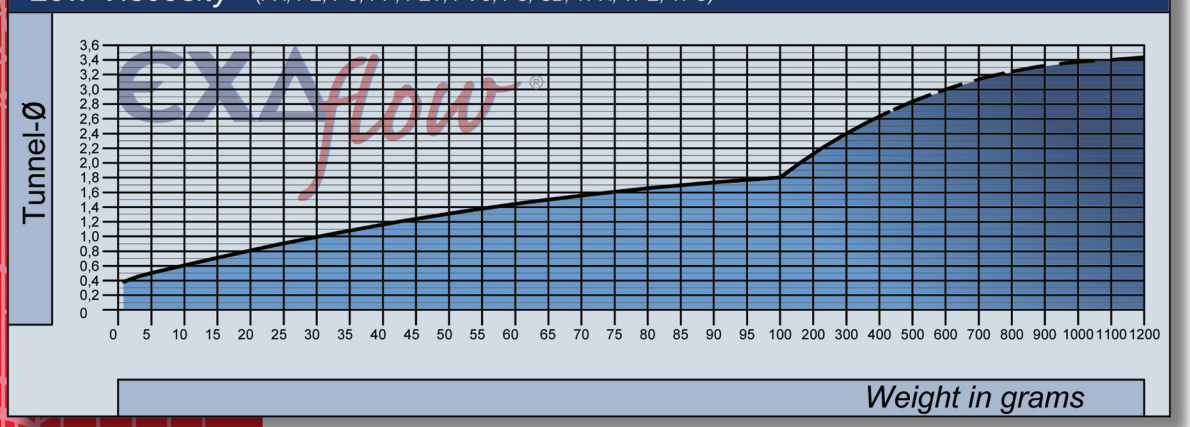

Medium Viscosity (ABS, ASA, PS, PC/ABS, PBT, SAN)

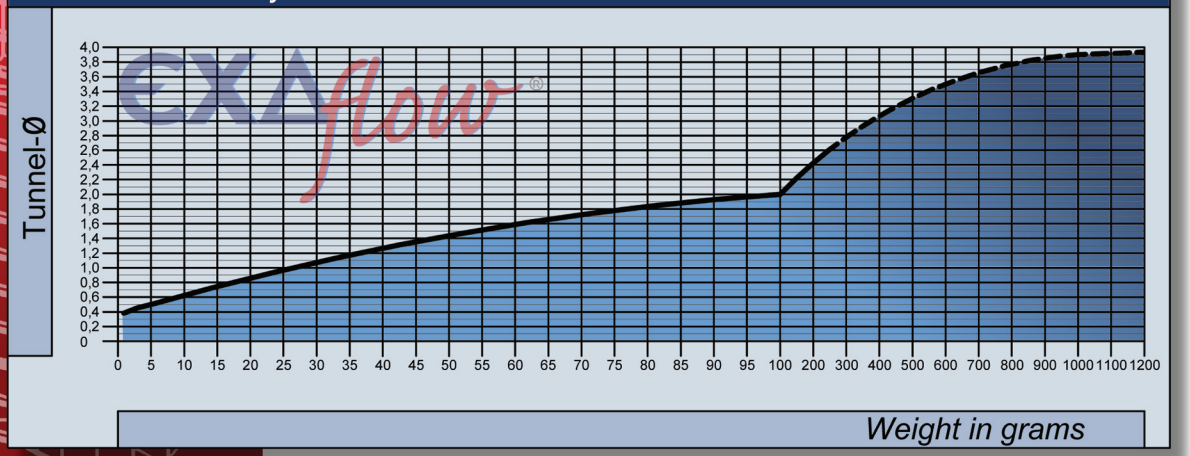

High Viscosity (PC, PPS, PSU, POM-H, PES, PPO, PEI, PC-ABS, PC-PBT, PMMA, PVC)

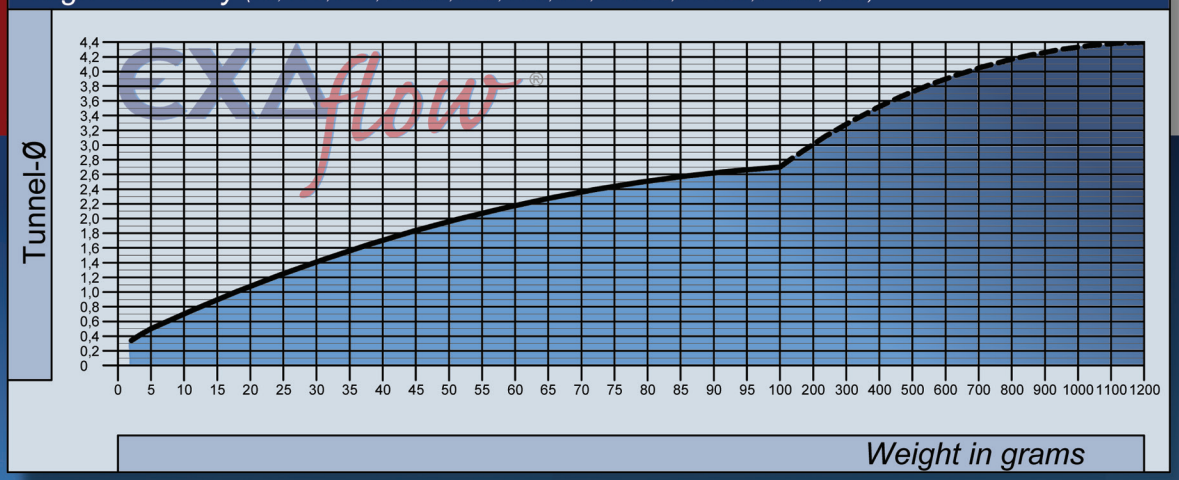

Midiflow - GMK

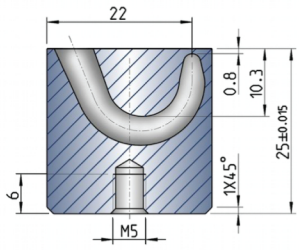

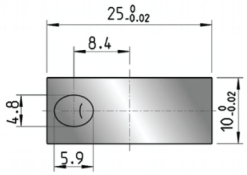

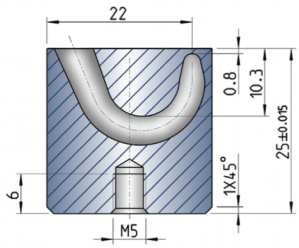

GMK-1

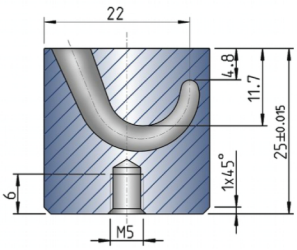

GMK-2

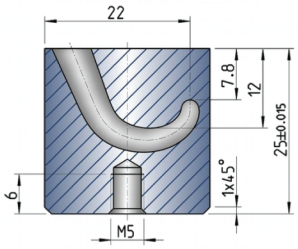

GMK-3

Technical information

For bottom (submarine) gating of medium components. Supports contouring to a depth of 8,0 mm. Suitable for gate diameters up to 1,8 mm and shot weights up to 100 g per insert.
The Midiflows range from EXAflow ® can be used to process all common plastics, including reinforced types

Midiflow GMK-1

Installation example: below the parting line

Installation example: above the parting line

Midiflow – GMK-1 benefits

- *Gating point may be located up to 8,0 mm above the parting line*
- *Permits gating immediately behind projecting ribs*
- *Gate may be remote from moulding wall*
- *The spherical geometry in the gate area permits gating on inclined or curved surfaces*

Midiflow GMK-2

Installation example: below the parting line

Installation example: above the parting line

Midiflow – GMK-2 benefits

- *Gating point may be located up to 5,0 mm below or above the parting line*
- *Permits gating immediately behind projecting ribs*
- *Gate may be remote from moulding wall*
- *The spherical geometry in the gate area permits gating on inclined or curved surfaces*

Midiflow GMK-3

Installation example: below the parting line

Installation example: above the parting line

Midiflow – GMK-3 benefits

- Gating point may be located up to 8,0 mm below the parting line
- Permits gating immediately behind projecting ribs
- Gate may be remote from moulding wall
- The spherical geometry in the gate area permits gating on inclined or curved surfaces

Installation dimensions „GXK,GMK“

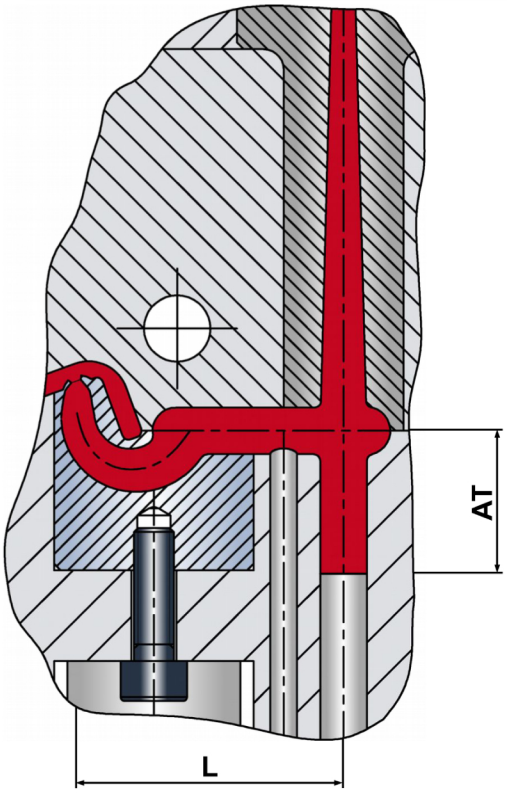

Plastic group	GXK	GMK
HD-PE, LD-PE, PET, PP, PA, PC, PVC. (L)	>35	>30
Runner design	round	round
Ejector depth (AT)	>35	>30
ABS, M ABS, ASA, PS, PC/ABS, POM, PBT. (L)	>40	>35
Runner design	round	round
Ejector depth (AT)	>40	>35
Elastomere TPE, TPU, TPP, TPA. (L)	>30	>25
Runner design	arbitrary	arbitrary
Ejector depth (AT)	>30	>16
Brittle plastics	on request	on request
Runner design	half-round	half-round
Ejector depth (AT)	on request	on request

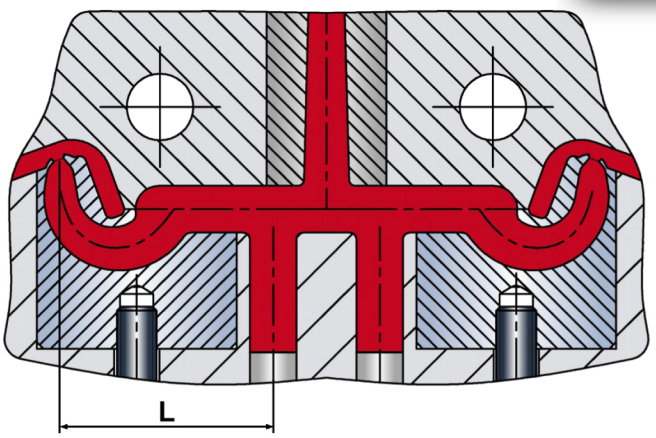

Technical information

Recommended distances "L" from the injection point to the sprue ejector are given above for the various material groups.

The distance "AT" describes the correlated ejector depth.

NOTES

SUPERIOR DIE SET CORPORATION
900 West Drexel Avenue • Oak Creek, WI 53154
Phone (800) 558-6040 • FAX (800) 657-0855
www.superiordieset.com

EXAflow

SUPERIOR DIE SET CORPORATION®

SERVING THE DIE & MOLD BUILDING INDUSTRIES

900 W. Drexel Avenue • Oak Creek, WI 53154
Phone (800) 558-6040 • FAX (800) 657-0855
superiordieset.com